Towards Development of Safety-Enhanced Leadscrew Platform with Floating Mechanism

Thesis is submitted in partial fulfillment
of the requirements for the degree of

Master of Mechanical Engineering

By

PRODIP MONDAL
Examination Roll no. – M4MEC23018.
Registration no. – 154307 of 2020-2021.

Under the guidance of

Prof. Tarun Kanti Naskar
&
Prof. Nipu Madak

DEPARTMENT OF MECHANICAL ENGINEERING
FACULTY OF ENGINEERING & TECHNOLOGY
JADAVPUR UNIVERSITY
KOLKATA – 700032

FACULTY OF ENGINEERING AND TECHNOLOGY
JADAVPUR UNIVERSITY

CERTIFICATE OF APPROVAL

The forgoing thesis entitled "**Towards Development of Safety-Enhanced Leadscrew Platform with Floating Mechanism"** is hereby approved as a creditable study of an Engineering subject carried out and presented in a manner that fulfils its acceptance as a prerequisite to the degree for which it is submitted. It is understood that by this approval, the undersigned does not necessarily endorse or approve any statement made, opinion expressed, or conclusion drawn therein but approves the thesis only for the purpose for which it is submitted.

Committee of final evaluation of thesis:

Signature of Examiners

FACULTY OF ENGINEERING AND TECHNOLOGY

JADAVPUR UNIVERSITY

CERTIFICATE OF RECOMMENDATION

I hereby recommended that thesis presented under my supervision by Mr. ***Tarun Kanti Naskar*** *entitled "***Towards Development of Safety-Enhanced Leadscrew Platform with Floating Mechanism"** *be accepted in partial fulfillment of the requirements for the degree of* ***Master of Mechanical Engineering.***

Countersigned:

Prof. Tarun Kanti Naskar
(Thesis Supervisor)

Prof. Amit Karmakar
Head of Department
Department of Mechanical Engineering

Prof. Saswati Mazumdar
Dean
Faculty of Engineering and Technology

Prof. Nipu Modak
(Thesis Supervisor)

DECLARATION OF ORIGINALITY AND COMPLIANCE OF ACADEMIC ETHICS

I hereby declare that this thesis contains a literature survey and original research work done by me. All the information in this document has been obtained and presented according to academic rules and ethical conduct. I also declare that, as required by these rules and conduct, I have fully cited and referenced all material and results that are not original to this work.

Name: **PRODIP MONDAL**
Examination Roll No: **M4MEC23018**
Class Roll No: **20211202008**
University registration no: **154307 of 2020-21**

Thesis Title: "**Towards Development of Safety-Enhanced Leadscrew Platform with Floating Mechanism".**

Signature with Date:

ACKNOWLEDGMENT

I express my sincere gratitude to my supervisor, **Prof. Tarun Kanti Naskar** for her encouragement, suggestion, and advice, without which it would not have been possible to complete my thesis successfully. I would like to thank **Prof. Nipu Madak** for being a constant source of encouragement, inspiration and for their valuable suggestions coupled with their technical expertise throughout my research work. It was a great honor for me to pursue my research under their supervision.

I would also extend my gratitude to my colleague cum friend, **Mr. Sandipan Dutta**, a PG student of Electrical Department within our university. His unwavering support and continuous encouragement during the course of my thesis work have been invaluable. Additionally, I would like to express my appreciation to all the members of our Simulation laboratory for their various forms of assistance throughout this journey.

I would also like to express my sincere gratitude to **Mr. Sowmitro Jana,** Director of **Vikrant Special Machines Pvt. Ltd.**, for his unwavering support and for providing me with the opportunity to achieve this milestone. Without his involvement, this achievement would never have been possible. I am truly grateful for the opportunity he gave me and for his belief in me, which enabled me to transform my dream into a reality.

Finally, I extend my words of gratitude to my family for personally motivating me to carry out the work smoothly.

Date: ------------------ ----------------------

(Prodip Mondal)

TABLE OF CONTENT

CHAPTER 3

CHAPTER 4

CHAPTR 5

LIST OF FIGURES

LIST OF TABLE

ABSTRACT

The pursuit of precision and safety in vertical linear motion systems is of paramount importance in various industrial and automation applications. This thesis presents the design, analysis, and validation of a lead screw-operated vertical platform equipped with a floating nut and a safety nut. The primary objective of this research is to address the challenges associated with vertical linear motion mechanisms, including backlash, wear, and the need for enhanced safety measures.

The platform's design integrates a novel floating nut mechanism that enables precise and controlled vertical motion while minimizing friction and backlash. Additionally, a safety nut is incorporated into the system to engage in emergency situations, providing an essential layer of protection against unforeseen mechanical failures in vertical applications.

The research encompasses a comprehensive study of theoretical principles, design methodologies, and simulation techniques specific to vertical motion systems. Simulation and analysis are employed to evaluate the platform's performance under various loads, speeds, and vertical travel distances. Experimental validation tests are conducted to assess the practical applicability and reliability of the platform in vertical motion scenarios.

The results demonstrate that the lead screw-operated vertical platform with a floating nut and safety nut offers superior precision, reduced backlash, enhanced safety, and efficient operation in vertical linear motion applications. This platform holds significant promise for industries requiring precise vertical positioning, such as elevators, material handling, and stage systems.

By addressing the unique challenges of vertical linear motion, this thesis contributes to the advancement of automation and industrial processes, offering a potential solution for achieving unparalleled precision and safety in vertical motion systems. The findings presented here open new avenues for research and development, paving the way for innovative applications that demand reliable and precise vertical motion control.

This research underscores the importance of tailored solutions in addressing the specific needs of vertical linear motion systems, with the potential to redefine the standards of precision and safety in vertical applications across various industries.

Chapter 1

1.1 Introduction

In the realm of precision machinery, achieving impeccable alignment between various components and mitigating mechanical imperfections are essential prerequisites for peak performance and reliability. The leadscrew, a pivotal element in many precision systems, serves as the conduit for transforming rotary motion into linear motion. The precision and stability of this transformation significantly depend on the alignment between the drive system, including the nut, and the guide system, which guides and supports the leadscrew. Moreover, the inherent ovality of the leadscrew and safety nut can introduce undesirable variations in motion, thereby compromising the machinery's overall precision and efficiency. This thesis explores a novel design approach that addresses these intricate challenges by introducing a leadscrew with a floating nut and a safety nut. This innovative mechanism is conceived with a dual-purpose objective: firstly, to facilitate precise alignment adjustments between the drive system and the guide system, and secondly, to address the ovality issues associated with both the leadscrew and the safety nut. Develop a leadscrew design that incorporates a floating nut, allowing for real-time alignment adjustments between the drive system and the guide system. This capability will ensure optimal engagement and minimize wear and tear over time. Design a mechanism that can actively compensate for the inherent ovality of both the leadscrew and the safety nut, thus reducing vibrations, noise, and fluctuations in linear motion, and enhancing overall precision. Investigate and implement safety measures to guarantee the secure operation of the leadscrew system during alignment adjustments and ovality compensation, thereby safeguarding both the machinery and personnel involved. This thesis will embark on a comprehensive journey that begins by surveying the current state of precision machinery design, focusing on leadscrew-driven systems and their inherent challenges. It will subsequently delve into the theoretical foundations and practical considerations underpinning the proposed leadscrew design, with specific emphasis on modeling and simulation techniques. Furthermore, the research will encompass the integration of safety protocols to ensure that alignment adjustments and ovality compensation can be executed without compromising the wellbeing of operators or the functionality of the precision machinery.

The ultimate goal of this research is to advance the field of precision machinery by introducing a leadscrew with a floating nut and safety nut. This innovation holds the potential to revolutionize precision systems by significantly enhancing their precision, reliability, and safety, making them more adaptable and efficient in various applications. As we delve deeper into the intricacies of this design, we move one step closer to a future where precision machinery sets new standards for excellence and performance.

1.2 Background and Motivation

High voltage transformers shown in Figure No1.2 (a) are one of the main products offered by HITACHI ENERGY INDIA LIMITED. This Transformer has a important items is ceramic bushing/ porcelain bushing Figure No1.2 (b) which are insulating components used in electrical equipment to provide electrical isolation and mechanical support for conductors. The ceramic bushing is consisting of Porcelain or ceramic body, Metal flanges or terminals, Insulating glaze, internal conductor, Oil or gas barrier and few other items. To assemble expansion bowl, spring, oil slight glass, oil filling plug and top terminal at top side of bushing require a hydraulic pressing attachment which can be possible only vertical position. 170 kv, 245 kv& 400 kV Transformers has diffident size of ceramic bushing in length which is vary 2 mtr to 5 mtr approximate.

Fig.-1.2 (a) Transformer

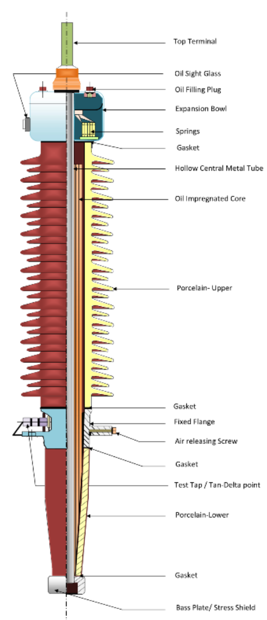

Fig.-1.2(b) Transformer Bushing

In order to make it easier for the operator to reach the desired working height, HITACHI ENERGY INDIA LIMITED assembled the bushing using a scissor lift. However, because to operator vertical motion, Hitachi's safety department is recently banned the process. They went to Vikrant Special Machines Private Limited to find solutions, and Vikrant suggested using a pit-type platform, which would let the operator to stay on the ground level as the job travelled vertically into the pit. As agreed they asked to make a conception drawing to verify the system and raise a purchase order to Vikrant Turn on Key basis. To address the safety concern that HITACHI was looking for, Vikrant made the decision to develop a platform with a leadscrew-floating nut and an additional safety nut-driven platform.

1.3 Literature Review

The analysis focused on the design of the mechanical scissor lift. The lift consists of a base, two pairs of scissor arms, and a platform. The scissor arms are connected to the base by hinges, and they are raised and lowered by a screw jack. The paper then presents the results of the analysis. The analysis was performed using computer simulations and linear static FEA analyses. The results showed that the designed components of the scissor lift were within the acceptable range. However, some manufacturers may find that the allowable maximum deflection is too excessive. In this case, they may need to take additional safety precautions to avoid failure during operating conditions. The paper concludes by discussing the implications of the results. The results suggest that the mechanical scissor lift that was analyzed is a safe and reliable design. However, manufacturers may need to take additional safety precautions to avoid failure during operating conditions. [1].The lift mechanism of an engineering car is the subject of this study. To create a mechanic system simulated model and a hydraulic system simulated model, researchers used the Sim Mechanics toolbox and the Simulink toolbox. The modules were then packaged using Simulink's subsystem encapsulation technology. Finally, a mechanic-hydraulic coupled model of the lift mechanism was created, and dynamic simulating analysis was carried out. Additionally, it does DOE analysis and optimisation design of the coupled system using the cooperative method provided by iSIGHT and achieves satisfactory results. The modeling and optimisation approach utilised in this research can be usefully applied to the analysis of other coupled mechanic-hydraulic systems. [2].Long vertical ropes are present and require routine inspection for infrastructure upkeep. For steady observation in places where people can't go to, the development of lifting equipment and ropes is necessary. It has been suggested to use a lifting mechanism based on an alternating rotation hoist to lift inspection devices to the desired height. For the purpose of improving speed and accuracy, this research implements an autonomous movement of the lifting device through computer control. Additionally, a new frame that includes the inspection tool has been developed to reduce weight and maintain balance. Through experiments, the new frame's and control system's performances are assessed in terms of their quickness, precision, weight, and balance. The findings demonstrate the advantages of the newly created frame in terms of weight and speed[3].For the flexible guided lifting system, modeling and vibration control are investigated in the presence of output limitations, input hysteresis, guided rope defect, etc. Flexible guided lifting systems have intrinsic distributed parameter systems with time-varying length and infinite dimensions that are sensitive to external disturbances from boundary disturbance or fluid contact. The governing equation is obtained using the extended Hamilton's principle and reflects the dynamic response of such multiple ropes to boundary disturbances and several constraints. It takes the form of hybrid partial differential equations and ordinary differential equations. The system is then built to suppress unwanted vibration and stabilise using adaptive neural network control in combination with backstopping technology, with the neural network acting as a feed forward compensate for the unknown hysteresis nonlinearities in the system [4].The screw jack uses a straightforward lead screw mechanism to raise or lower heavy loads. To elevate the chassis of the vehicle for maintenance or breakdown repairs, use the mechanism. The mechanical advantage needed to elevate a vehicle rises with the use of screw jacks. It is therefore preferred to create a system that can use the mechanized jack as an automated mechanism, hence minimizing human labour. The automated mechanism will use the car's batteries for lifting. The goal of the paper is to illustrate strategies for navigating awkward circumstances during fitting and trouble-free repairs. Additionally, rule 3 and rule 9 of the Sustainable Development Goals (SDGs) are adhered to in terms of human health, infrastructure, innovation, and industry. [5] The ship lift in Barbados uses screw jacks to hoist equipment, creating an incredibly simple and robust system that has been in use for almost a century. It wasn't until the owners faced liquidation that it started to fall apart, and then the facility was abandoned. Currently, attempts are being made to restore the building, with the restoration of a fully functional dry dock and historical preservation being two of the main goals. The ship lift at the Barbade uses leeching vises to remove equipment, resulting in an elegantly straightforward and robust system that has worked for almost a century. She didn't become dejected until its owners had to deal with the liquidation, at which point the installation was shut down. Currently, efforts are being made to restore the facility by putting. [6] The goal of this research is to create a motorised car jack that can lift a maximum of 2 tones. The device would be connected through a cigarette lighter adapter in the vehicle and would include an electric motor that is driven by a 12-volt battery of a tiny vehicle. The main issue with the auto jacks that are now on the market is that they must be manually operated, which requires a lot of physical effort to lift the car. Based on straightforward engineering principles and their understanding of existing jacks, the authors came up with three potential solution options. In order to assess and choose the best option for further development into a detailed design, a binary dominance matrix analysis was performed. Software called Solid Works 2016 was utilised to replicate. [7] The tip-over of scissor lifts in operation has frequently resulted in the death and/or severe injuries of workers. The objective of this study is to enhance the understanding of its major mechanisms and factors influencing scissor lift stability. Both experimental and modeling approaches were used in this study. Two series of experiments were performed under possible tip-over scenarios: curb impact and pothole depression. Based on the dynamic characteristics identified from the experimental results, a lumped-parameter model of the scissor lift was developed. It was applied to investigate the effect of scissor structure flexibility on the tip-over potential of the lift, to understand tip-over mechanisms, and to explore preventive strategies. This study found that the fundamental natural frequencies of the lift were generally in a range of 0.30 - 2.08 Hz, which are likely related to the tip-over. Increasing flexibility of the lift structure is generally in-creased the tip-over potential. The tip-over threshold was also a function of both ground slope and tilt speed of the lift. The results suggest that the lift should not be elevated on largely deformable and/or uneven surfaces such as bridged wood board or a soft soil base. The worker on the lift platform should avoid any large continuous periodic movement or forceful action in the horizontal p lane, especially when the lift is fully elevated. Besides the tilt angle of the lift, the tilt speed should be monitored to help prevent the tip-over.[8] This research paper studies the static stability of six kinds of scissor lifts with one input force of hydraulic actuator by having the input on the lines of the nodes of the scissor lifts. Firstly, the static stability of single scissor arm is studied by using energy method and modeling method in the software Nastran. The stability results of two methods are then compared. Subsequently, the scissor lift models with hydraulic actuators are prepared to analyze the static stability. The static stability of six kinds of scissor lifts is compared. It is thus found that the results of the overall model are closer to the actual situation. The analysis of single arm models has made it easier to compare the theoretical solutions and modeling solutions thus the study on stability of single scissor arm has been proved to be meaningful.[9] There exist vertical long ropes that need periodical inspection for infrastructure maintenance. Development of lifting devices along with the ropes is demanded for steady observation at human-unreachable positions. The lifting device based on alternating rotation hoist has been proposed for carrying inspection devices to the target level. This research realizes an automatic movement of the lifting device by computer control for the improvement of speed and accuracy. Furthermore, a new frame which is equipped with the inspection device is developed for saving weight and keeping balance. Through experiments, performances of the new frame and control system are evaluated from the aspects of speed, accuracy, weight and balance. The results show that the newly developed frame has advantages in weight and speed. The inclination of frame and ascender is measured. The error values are calculated to analyze the accuracy. And the developed control system can control frame effectively. [10] The safe operation of a sluice gate is thought to depend on the regular maintenance of the wire rope. In keeping with this, a six-wheeled wire rope climbing robot with the ability to carry cleaning and maintenance equipment for real-time cleaning and safety inspection of the sluice wire rope without disassembling it was proposed in this study. A separate driving and driven tram make up the created climbing robot. It uses a wheeled movement technique and a spring clamping mechanism. As a result, it can easily adjust to the constrained working environment and various sluice wire rope diameter ranges. The six-wheeled wire rope climbing robot is also designed to have the basic features of wheeled climbing robots, such as a simple build, straightforward control, and stable climbing speed. [11] With the development of technology, more effort is being made to generate any type of labour, whose need has been steadily declining. Implementing superior designs can efficiently and economically reduce the effort needed to produce the desired product. Rotary motion is changed into reciprocating motion using power screws. An example of a power screw is an item lifting jack, which uses a little force exerted in a horizontal plane to raise or lower a heavy weight. The object lifting jack will be integrated with an electric motor in this constructed type, and the electricity required for the operation will be drawn from a d.c. battery, increasing the mechanical advantage.[12] Researchers from all around the world are constantly working to enhance and apply better and resilient design of materials at the workplace for productivity, efficiency, and effectiveness due to the rising degree of technology. This paper presents the detailed design process for a quick-lifting screw jack. Fundamentally, the design is a variation of the standard scissor jack. The ergonomic issues that result from prolonged bending or squatting positions while operating the standard jacks are their main drawbacks. These back and waist discomfort issues are brought on by repeatedly moving the wrench or crank shaft in an uncomfortable posture for an extended period of time. These prompted the creation and modification of a safe gear arrangement quick lifting screw jack. [13]This Project relates to a “Mechanical Lifting Mechanism” performing on the Lead Screw Mechanism. Lift may be a simple automaton that raise element or object from ground level to a particular height to perform a selected work with maximum load and minimum efforts. This project describes the analysis of a mechanical lifting mechanism which works on the principle of Lead Screw Mechanism. The design is developed keeping in mind that the lift is operated by mechanical means in order that the cost of the lift is reduced. Also, such design can make the lift more compact and is suitable for medium scale work. Conventionally a Mechanical lifting Mechanism is employed for lifting a vehicle, Material handling in industry, Building elevator, home lift, and lots of other applications. Our Research relates to the accessories that will be included within the Design of a Mechanical Lifting Mechanism, which is able to increase its Efficiency, Power, Safety and easy Working. [14]

1.4 Identification of Research Loopholes

Identifying research loopholes or gaps in the design of a leadscrew-operated lifting platform with a floating nut and safety nut is essential for ensuring that the research project addresses meaningful and relevant challenges. Here are some potential research loopholes or gaps that should be considered:

Floating Nut Design: There may be limited research on the most effective design parameters for the floating nut in terms of material selection, geometry, and size. Investigating the influence of these design variables on alignment adjustment and ovality compensation could be a significant research area.

Ovality Compensation Mechanisms: Existing literature may not provide a comprehensive overview of different ovality compensation mechanisms for leadscrews and safety nuts. Research can explore various techniques, such as active control systems, to minimize ovality effects.

Integration of Safety Features: There could be a lack of research on integrating safety features into the leadscrew system effectively. Investigating how to ensure operator safety during alignment adjustments and ovality compensation is crucial.

Real-world Applications: Much of the existing research might be theoretical or limited to laboratory settings. Research gaps may exist in terms of practical implementation and validation of the proposed design in real-world industrial applications.

Maintenance and Reliability: Research could explore how the design affects maintenance requirements and the long-term reliability of the system. Identifying potential issues and solutions related to wear and tear is essential.

Industry-specific Applications: Existing research may focus on general applications of leadscrew systems, but there may be research gaps regarding specific industry needs and customization requirements.

1.5 Aims and Objective

The aim of this thesis is to design a leadscrew-operated lifting platform equipped with a floating nut and safety nut, optimized for precision, reliability, and safety in vertical motion applications. Following steps are the objectives of the thesis;

Design and Modeling: Develop a comprehensive understanding of leadscrew mechanics and principles, and create a detailed design model for the lifting platform, taking into account the specific requirements of a floating nut and safety nut.

Alignment Compensation: Devise a mechanism that allows for real-time alignment adjustments between the leadscrew, floating nut, and guide system, ensuring optimal engagement and minimizing wear and tear.

Ovality Compensation: Design and implement a mechanism that actively compensates for the inherent ovality of the leadscrew and safety nut, reducing vibrations and enhancing overall platform stability and precision.

Practical Implementation: Develop a leadscrew driven vertical platform as per Hitachi India Limited specification with floating nut mechanism and safety nut arrangement which is validate its performance in real-world industrial applications.

Maintenance and Reliability: Investigate the maintenance requirements and long-term reliability of the system, identifying potential issues related to wear and tear and proposing solutions for improved longevity.

1.6 Organization of Thesis

Chapter 1: Outlines the preliminary concept of thesis work. It contains a brief history lifting mechanism, my motivation for this work and an outlook about the different chapters and topic of discussion in this thesis.

Chapter 2: Chapter 2 deals with the design of lead screw with floating nut and Safety nut.

Chapter 3: Chapter 3 deals with general overview of the platform as per customer specification modeling of the platform.

Chapter 4: Stress analysis with inventor software of all major components and analysis.

Chapter 5: Conclusion and scope of future work

Chapter 2

Lead screw with Floating and Safety Nut design

Designing a square threaded leadscrew and nut shown nomenclature in Fig No.3(a)for a vertical application involves several considerations, including load capacity, speed, accuracy, and safety. Below are a simplified design process and some key parameters to consider:

2.1 Determine Application Requirements:

a. The lead screw operated platform used to up/down the ceramic bushing of transformer
b. The operator safety is key factor to development the platform.
c. Safety locking system of any position of its travel length.
d. Additional safety with the double nut using.

Load Capacity: Customer specified load is 2 ton with self weight of carriage; the total load is approximately F_L=2.5 Ton. = 2500kgx 9.81= 24525 N

Speed: customer specified up/down speed is 1000mm/min. we consider that from square thread leadscrew will be M65x10 pitch Single strained, L_p=10 mm

RPM of the screw, N = $\frac{\text{LINEAR SPEED}}{\text{PITCH OF SCREW}} = \frac{1000}{10} = 100$

Environmental Conditions: Consider factors like temperature, humidity, and exposure to contaminants.

2.2 Select Materials:

The material for the leadscrew is En8/C-40 and nut is Phosphor Bronze composition to meet the strength, corrosion resistance, and wear resistance requirements of our application. Hence the Co-efficient of Friction is μ_c = 0.21 at lubricated condition.

2.3 Selected Thread Profile:

Square threads offer several advantages over other types of threads, such as Acme threads or V-threads, in specific applications. The nomenclature of square thread is shown in the Figure no.2.3 (a) here are some of the advantages of square thread lead screws:

High Efficiency: Square threads have a larger contact area between the nut and the screw, resulting in higher efficiency compared to other thread forms. This means that they require less torque to move the load, reducing power consumption.

Self-locking: Square threads are self-locking, which means they can hold a position without the need for external braking mechanisms. This is advantageous in applications where safety and positional accuracy are critical.

Precise Positioning: Square threads provide precise positioning due to their self-locking nature. This makes them suitable for applications that require accurate and repeatable linear motion control.

High Load Capacity: Square threads can handle high axial loads and are well-suited for heavy-duty applications. They have a large contact area, which helps distribute the load evenly across the threads, reducing the risk of thread wear or failure.

Long Lifespan: Square threads have a longer lifespan than some other thread forms due to their robust design and high load-bearing capacity. This can result in lower maintenance and replacement costs over time.

Minimal Backlash: Square threads typically have less backlash compared to other thread forms, making them ideal for applications where backlash must be minimized for precise motion control.

Easy Machining: Square threads are relatively easy to machine and manufacture, which can result in cost savings during production.

Reduced Heat Generation: Square threads produce less heat during operation compared to other thread forms with greater friction. This can be important in applications where temperature control is critical.

Reduced Wear: The square shape of the threads reduces the contact stress compared to sharp V-threads, which can lead to less wear and longer thread life

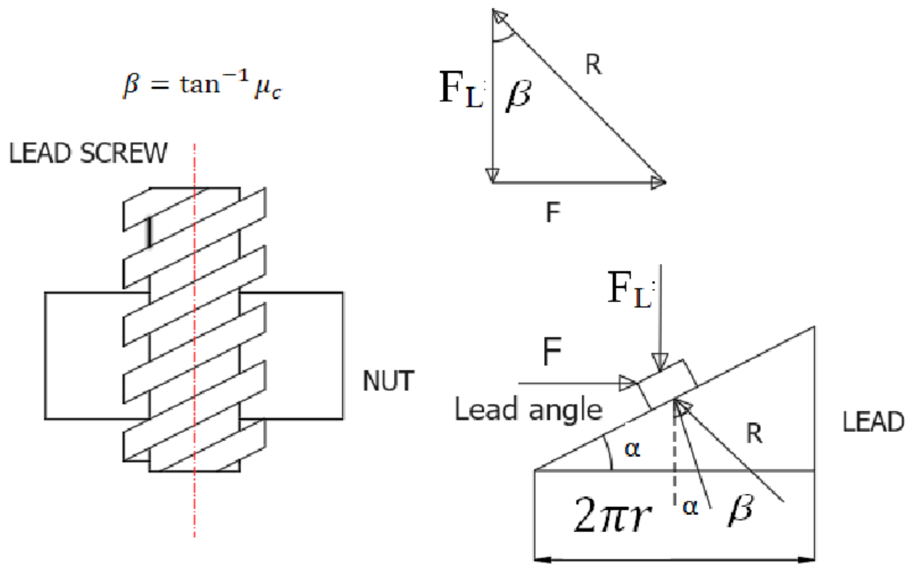

Fig.2.3. (a) Nomenclature of square thread

2.4 Calculate the mean/ pitch dia. of lead screw:

Mean Diameter, D_m= (Major Dia. D_o+ Minor Dia. D_i)/2=

(65-55)/2 mm= 60mm

2.5. Determine Efficiency of Screw:

Helix angle, α = $\tan^{-1}\frac{L_p}{\pi X D_m} = \tan^{-1}\frac{10}{\pi\ X\ 60} = 3.036°\ Approx.$

Friction angle, $\beta = \tan^{-1}\mu_c = \tan^{-1}(0.21) = 11.86°$ Approx.

So, Efficiency of Screw, $\mu = \frac{\tan(\alpha)}{\tan(\alpha+\beta)} = \frac{\tan(3.036°)}{\tan(3.312°+11.86°)}$ = 0.2 approx.

2.6 Velocity Ratio of Lead Screw:

VR= $\frac{X_E}{X_L}$

Where, X_E = Displacement Effort = $\pi \; X \; D_m \;\; = \pi \; X \; 60 = 188.496 \; mm$

X_L = Displacement Load = L_p = 10 mm

VR= $\frac{X_E}{X_L}$ = $\frac{172.788}{10} = 18.85$, Approx.

2.7 Mechanical Advantage

mA= VR X μ = 18.85X0.2 =3.8, $, Approx.$

2.8 Effective load of lead screw

$$mA = \frac{F_L}{F_E}$$

$$F_E = \frac{F_L}{mA} = \frac{24525 \; N}{3.8} = 6453.95 \;\cong 6454 \; N$$

2.9 Torque require to up the Effective load

T=$F_E \; X \; \frac{D_m}{2} = \; 6454N \; X \; \frac{60}{2} mm = 193620Nmm = 193.62Nm \cong 180Nm$

2.10 Motor Power require to drive the Load

We know, P= $\frac{2 \text{ X } \pi \text{ XNXT}}{60} = \; \frac{2\text{X}3.1416\text{X}100\text{X}180}{60} \; W = 1884.9555 \; W = 1.88 \; kW \;\; \cong 2 \; kW$, Hence

We use 5.5 kW Motor with 5.5/2=2.75 Factor of Safety.

2. 11 Self-Locking Property

Certainly, the self-locking behavior of a square thread can be mathematically expressed using the coefficient of friction and the thread angle. Let's break down the mathematical formulation step by step:

Friction Force: the friction force between two surfaces is given by the formula:

$$F_{friction} = \mu_c \, . F_{normal}$$

$F_{friction}$ is the frictional force.

μ_c Is the coefficient of friction between the mating surfaces.

F_{normal} is the normal force pressing the surfaces together.

Thread Angle: The angle of the thread is critical in determining the self-locking behavior. A square thread typically has an angle of 90° (perpendicular to the axis), which means that the thread angle α is 45°.

Mechanical Advantage: The mechanical advantage of the square thread can be defined as the ratio of the effort force F_{effort} to the load force F_{load} (the force required to move the threaded components):

Mechanical Advantage = $\frac{F_{effort}}{F_{load}}$

Self-Locking Condition: For self-locking, the mechanical advantage should be greater than or equal to the coefficient of friction:

$$\frac{F_{effort}}{F_{load}} \geq \mu_c$$

Rearranging the equation, we get:

$$F_{effort} \geq \mu_c \, . F_{load}$$

Combining the friction force formula and the self-locking condition:

$$\mu_c \, . F_{normal} \leq F_{effort} \leq \mu_c \, . F_{load}$$

In the case of a square thread, the thread angle α is 45°, so the normal force F_{normal} is related to the load force F_{load} by:

$$F_{normal} = F_{load} \cdot \cos\alpha$$

Substituting this into the inequality:

$$\mu_c \, F_{load} \cdot \cos\alpha \leq F_{effort} \leq \mu_c \cdot F_{load}$$

Since, $\cos 45° = \frac{\sqrt{2}}{2}$:

$$\frac{\mu_c}{\sqrt{2}} \cdot F_{load} \leq F_{effort} \leq \mu_c \cdot F_{load}$$

The mathematical formulation illustrates the relationship between the coefficient of friction, the load force, and the effort force required to move the square threaded components. For self-locking behavior, the effort force should fall within this range to ensure that the thread resists backdriving. Keep in mind that this analysis is simplified and assumes ideal conditions; neglecting factors like thread wear, surface roughness, and variations in friction coefficients. We can choose the leadscrew mechanism based on the discussion above and our concern for our customers' safety.

$\frac{F_{effort}}{F_{load}} \geq \mu_c$ Form our case we find, $\frac{6454\ N}{24525\ N} = 0.263 \geq \mu_c$

So, the lead screw is self locked.

2.12 Critical Speed of Lead Screw

$$\text{RPM}=\frac{(4.76\ X\ 10^{6)}\ X\ D_i\ X\ F_S}{K\ X\ L^2}$$

Table no. 2.12. (a) The end fixity factor

The End Fixity Factor	
End Condition	**Fs**
Fixed-free	0.36
Supported-supported	1.00
Fixed-supported	1.47
Fixed-fixed	2.23

Where:

D_i = minor diameter of the lead screw (in.)

Fs = end fixity factor (see table below)

L = unsupported length of the lead screw (in.)

K = factor of safety (typically 1.0)

$$RPM = \frac{4.76\ X\ 10^6\ X\ 2.2\ X\ 1.47}{1\ X\ 162^2} = 586.57 \text{ `}> 100$$

OUR DESIGN RPM

The end fixity factor depends on the way the lead screw is supported. In our condition one end fixed and one end supported is applicable. The following table shows the values of Fs for different end conditions:

The critical speed is an important consideration in the design of lead screws. If the rotational speed of the lead screw exceeds the critical speed, the lead screw may vibrate and become damaged.

Here are some additional things to keep in mind when calculating the critical speed of a lead screw:

The critical speed is affected by the load on the lead screw. The heavier the load, the lower the critical speed.

The critical speed is also affected by the stiffness of the lead screw. The stiffer the lead screw, the higher the critical speed.

It is always a good idea to factor in a safety margin when calculating the critical speed. This will help to ensure that the lead screw does not exceed its critical speed under normal operating conditions.

2.13 Screw stress calculation

a. Compressive stress in screw

$$\sigma_c = \frac{F_L}{A_C} = \frac{F_L}{\frac{\pi}{4} D_i^2} = \frac{24525}{\frac{\pi}{4} x55x55} = 10.33 \frac{N}{mm^2} = 10.3 \text{ MPa}$$

Where,

$$\sigma_c = Compressive\ stress\ of\ leadscrew$$
$$F_L = Axial\ load\ on\ leadscrew$$
$$A_C = Core\ diameter\ of\ lead\ screw$$

b. Shear stress due to torque

$$\tau_s = \frac{T \text{ x } R_i}{J} = \frac{180x10^3 \text{ x } 27.5}{\frac{\pi}{32} \text{ x } D_i^4} = \frac{180x10^3 \text{ x } 27.5}{\frac{\pi}{32} \text{ x } 55^4} = 5.5 \frac{N}{mm^2} = 5.5 \text{ MPa}$$

Where,

$$\tau_c = Shear\ stress\ due\ to\ torque\ of\ leadscrew$$
$$T = Torque\ applied\ on\ screw\ to\ move\ the\ load\ up$$
$$J = Polar\ Moment\ of\ Inertia$$

c. Principal or combined stresses

(i) Maximum normal stress

$$\sigma_{max} = \frac{1}{2}[\sigma_c + \sqrt{(\sigma_c^2 + 4\tau_s^2)}] = \frac{1}{2}[10.3 + \sqrt{10.3^2 + 4 \text{ x } 5.5^2}]$$

$$= \frac{1}{2}[10.3 + \sqrt{10.3^2 + 4\, x\, 5.5^2}]$$

= 12.535 MPa < < Theoretical normal stress

(i) Maximum shear stress

$$\tau_{max} = \frac{1}{2}\sqrt{(\sigma_c^2 + 4\tau_s^2)} = \frac{1}{2}\sqrt{(10.3^2 + 4 \text{ x } 5.5^2)}$$

= 7.535 MPa < < Theoretical shear stress

2.14 Nut floating Mechanism

A nut floating mechanism Fig.2.14.(a) is a design feature used in precision engineering applications to mitigate problems related to the ovality of the leadscrew and column deflection in a screw-operated platform. Ovality refers to the non-uniformity or eccentricity of the screw thread, which can result in uneven motion or binding as the nut moves along the screw. Column deflection occurs when the platform or load is moved by the screw experiences bending or deformation due to the applied load.

Here's how a nut floating mechanism works to address these issues:

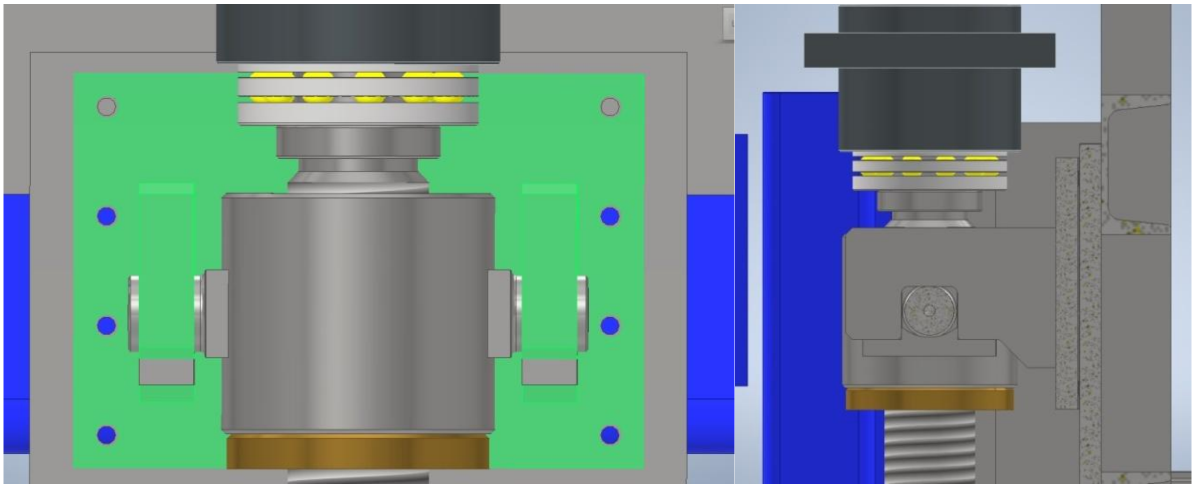

Fig.2.14.(a) Assembly of nut floating mechanism

Floating Nut Design: In a traditional screw and nut assembly, the nut is rigidly fixed to the platform or load-bearing element. In a nut floating mechanism, however, the nut is allowed some degree of freedom to move laterally and adapt to any irregularities in the screw's thread.

Flexible Mounting: The nut is mounted on the platform or load-bearing element using a flexible or compliant mounting system. This mounting system allows the nut to self-align with the screw's axis and compensate for any minor variations in the screw's thread profile.

Nut length, $L_n = \frac{4XF_L XL_p}{\sigma'_{pb}\,(D_o^2 - D_i^2)} = \frac{4x24525\,x10}{10x3.1416\,x(60^2 - 55^2)} = 32\ mm\ Approx\ \leq$ 100 mm Our Nut length

Where, σ'_{pb} =For steel screw and bronze Nut. 10 MPa. (Data found from mechanical hand book)

2.15 Safety Nut

A safety mechanism involving two nuts: a main nut and a safety nut. The safety nut is installed with four studs and is designed to maintain a 10 mm gap between itself and the main nut under ideal conditions. The primary purpose of this arrangement is to prevent the platform from free-falling in the event that the main nut becomes damaged.

Here's a breakdown of how this safety mechanism works:

Main Nut: This is the primary nut responsible for holding the platform or load in place. In ideal conditions, there is no axial load on the main nut, which means it isn't directly bearing any vertical weight or force. Its purpose is to secure the load in position.

Safety Nut: The safety nut is installed alongside the main nut but does not bear any load under normal, ideal conditions. Instead, it is designed to act as a backup or secondary support in case the main nut becomes damaged or fails. The 10 mm gap is maintained between the safety nut and the main nut to ensure that it doesn't interfere with the normal operation of the main nut.

Four Studs: The safety nut is attached to the system with four studs, which provide additional stability and redundancy. These studs ensure that the safety nut remains in place and ready to take on the axial load if needed.

Axial Load: The axial load refers to any vertical load or force applied to the system, such as the weight of a platform or the load it is carrying. Under normal conditions, this load is supported by the main nut. However, if the main nut becomes damaged or fails for any reason, the safety nut is designed to step in and support the load, preventing a free fall.

In summary, this safety nut arrangement is a precautionary measure to ensure that there is a backup mechanism in place to prevent catastrophic failures if the main nut becomes compromised. It provides an extra layer of security and helps maintain the safety of the platform or load.

Safety Nut length, $L_n = \frac{4XF_LXL_p}{\sigma'_{pb}\,(D_o^2 - D_i^2)} = \frac{4x24525x10}{7x3.1416x(60^2-55^2)} = 77\ mm\ Approx$ $\leq$ 80 mm Our Nut length

Where, σ'_{CI} =for steel screw and CI Nut. 7 MPa. (Data found from mechanical hand book)

Chapter 3

Description and Modeling for Pit Mounted Screw Type Bushing Platform

A pit-mounted screw-type bushing platform is utilized to adjust the working height at floor level for bush component assembly. The machine consists of the following significant subassemblies and few accessories:-

Up/ Down Main Platform

Top Operator Platform

We will now briefly explain the design and purpose of the above sub assemblies.

3.1 Up/ Down Main Platform

The heavy fabricated platform described in this setup is designed to provide stable and controlled movement to facilitate the assembly of the bush component at workable height. It is guided by four LM guide ways manufactured by Hiwin, which are mounted within a robust fabricated column. These guide ways ensure precise alignment and smooth motion for the platform. The entire system will be supported by a built-in base structure that is firmly anchored to the pit floor, and the column structure will also be supported by the pit's side wall. With the Operator platform, the tops of all four columns will be bolted together.

To facilitate the movement, two lead screws are employed. These lead screws are supported by a thrust bearing housing mounted on top of the platform. The thrust bearing inside the housing is responsible for handling the axial load, ensuring that the platform can withstand and move under heavy loads. Additionally, a bush is positioned within the housing to absorb the radial forces that are transferred to the lead screw, further enhancing its stability.

To drive the lead screws, a gearbox is utilized. The gearbox serves as a power transmission mechanism, converting the rotational motion into linear motion for the lead screws. It is connected to a chain sprocket mechanism, which efficiently transfers the power from the gearbox to the lead screws. This mechanism ensures synchronized movement of the lead screws, allowing for consistent and precise positioning of the platform.

Furthermore, a tension mechanism is incorporated into the system. This mechanism helps maintain appropriate tension in the chain sprocket, ensuring optimal performance and longevity of the components involved in the movement system.

Overall, this setup of a heavy fabricated platform, guided by LM guide ways, driven by lead screws, and controlled through a gearbox, chain sprocket mechanism, and tension mechanism, provides a reliable and robust solution for precise and controlled movement provide a satisfactory performance.

3.2 Top Operator Platform

An operator platform is a robust structure made of fabricated materials and topped with a chequered plate. It features a cutout measuring 1220x820, which acts as the exit point for the carriage equipped with a faceplate. The both sliding platforms are controlled by chain sprockets and mechanism powered by separate geared motors on both sides. The platform glides effortlessly along Hiwin's LM guide ways. While in operation, the slide platform remains hidden within the fixed platform. Additionally, there is another opening that allows access to the pit for stepping down.

3.3 Technical Specification of the machine.

Purpose: To lower / Lift Bushings to appropriate level to allow assembly work by fitters standing. The machine is constructed with the Table no 3.3(a) technical specification.

Table no. 3.3(a) Technical Specification

Parameter	**Details**
Max load capacity Bushing Faceplate	2.5 Ton
Max. point load of floor of the platform	500kf/m2, Approx
Size of lifting Platform	1200x900mm, Approx
Max load on pull outs	200 kg
Existing pit dimensions	2500 X 2500 X 4700 MM , Approx
Travel of the lifting platform	3850 mm
Min level of bushing faceplate from shop floor level	(-) 3850 mm

Max level of bushing faceplate from shop floor level	150 mm
Travel speed of platform	250-700mm/min, variable; AC VVF drive
Motor power of vertical travel	7.5 HP, AC
Travel speed of Sliding platform	1500mm/min, Approx
Motor power of Sliding platform	0.5 HP,AC
Supply, Control Voltage	415V, 3Ph, 50Hz, AC & 24 V, DC
Air Supply	Min 5 Bar

3.4 Type of items with manufacturing point of view

The manufacturing process is involving different types of components for a screw-operated pit-type bushing platform. Let's break down the components mentioned:

Major Bought out/ Proprietary Items: These are significant components or assemblies, Table No. 3.5(a) that are purchased from external suppliers or vendors. These items are likely essential for the functionality of the bushing platform but are not manufactured in-house. Examples could include motors, control panels, or other complex sub-assemblies. Sourcing these from external vendors may be more cost-effective or efficient than producing them internally.

Manufactured Items: These are items Table No. 3.6(a) that are produced in-house or by a specialized vendor based on specific engineering drawings or specifications. These components are typically custom-made for the specific design of the bushing platform. They may include parts that require precision machining, fabrication, or other specialized manufacturing processes.

Standard Part Items: These are off-the-shelf components that are readily available in the market. These parts are typically standardized and can be used in various applications without the need for customization. Using standard parts can save time and money in the manufacturing process as they don't require special manufacturing or customization.

3.5 List of Proprietary Items of the Machine

Table no.3.5(a) Proprietary Items

ITEM	SPECIFICATION & MODEL	MODEL & MAKE
A.C Elec. Motor	Power-7.5 Hp & Rpm-1440, Flange Mounted Frame Size-132, Qty-01 No.	Model- Make-BBL
Planetary Gearbox	Flange Mounted , Ratio- 19.99, Hollow Input To Shaft, 5.5 Kw Motor, Output Shaft- Solid, Peak Torque-2324 Nm, Qty01 No	Model-2190 Make-Top Gear
Roller Chain With Connecting Link	ASME/ANSI Standard Series Chain- 60, Double Strand, Pitch- 19.05, Roller Dia- 11.91, Pin Dia- 5.94, Chain Width Riveted- 48.3,Qty- 6mtr	Model- Make-Diamond
Lm Rail	Size-25, Mounting From Top, L- 4370(3895+475),Qty- 4 Nos.	Model- HGR25R4370C Make-Hiwin
Lm Block	Flange Type Block, Size-25, F- Type, Mounting –Top & Bottom	Model- HGW25CCZOC+ZZ/E2 Make-Hiwin
A.C Elec. Motor	Power-0.25 Hp & Rpm-1440, Flange Mounted Frame Size-63,Qty-02nos.	Make-Motovario
Heli-Worm Gearbox	Input Power-0.25hp, Output Rpm-5@ 4 Pole-Motor, To Fit With 63 Frame Size Motor, Hollow Output Shaft, Mounting- Universal Mounted , Qty-02 Nos	Model- TH63B4,0.18KW,4POLE ,B5+ HW030+NMRV-P063 Make-Motovario
Roller Chain With Wide Contour Bent Attachments	ASME/ANSI Standard Series Chain- 60/60ss, Pitch- 19.05, Flange Two Sides, One Hole , Diamond P/N-Wcb2-1h, Wcb2-1h-Wk-1,Wbk-1 , Qty-3 Mtr	Model- Make-Diamond
Lm Rail	Size-20, Mounting From Top,	Model- HGR20R1120C

	L- 1120, Qty- 4 Nos.	Make-Hiwin
Lm Block	Sq. Type Block, Size-20, F- Type, Mounting – Bottom, Qty- 8 Nos.	Model- HGH20CCZOC+ZZ/E2 Make-Hiwin
Pillow Block For Dia 35	Fitted With Ball Bearing Unit With An Extended Inner Ring And Set Screw Locking, Cast Iron, ISO Standards, Qty- 04 Nos.	Model- SY 35 TF Make- SKF
Pillow Block For Dia 30	Fitted With Ball Bearing Unit With An Extended Inner Ring And Set Screw Locking, Cast Iron, ISO Standards, Qty- 02 Nos.	Model- SY 30 TF Make- SKF
Self Aligning Ball Bearing	Radial Support For Bottom Of Lead Screw O.D-100,I.D-55, Thk-25,02 Nos.	Model- 2211 Make- SKF
Single Row Thrust Ball Bearing	Lead Screw Top Side D-110,I.D-60, Thk-35, 02 Nos	Model- 51312A Make- SKF
Deep Groove Ball Bearing	O.D-68,I.D-40, THK-15 BEARING NO.-6008ZZ	Model- 6008ZZ Make- SKF
Although not stated, all standard parts are marked to an assembly drawing.		

3.6 List Of Manufacture Item of The Machine

Table No.3.6 (a) Manufacture Items.

Sl No.	Drawing No.	Item Name	Qty	Material	Remarks
Group No-01					
1	M1071-01-01	Lead Screw	02 Nos.	En8	
2	M1071-01-02	Lock Nut	04 Nos.	En9	
3	M1071-01-03	Pb Nut	02 Nos.	Pb	

4	M1071-01-04	Nut Housing	02 Nos.	Ms Fab	
5	M1071-01-05	Pb Bush	02 Nos.	Pb	
6	M1071-01-06	Bush-Bearing Housing	02 Nos.	Ci-20	
7	M1071-01-07	Bearing Housing	02 Nos.	Ms	
8	M1071-01-08	Column Fabrication	02 Nos.	Ms Fab	
9	M1071-01-09	Column Joiner	04 Nos.	Ms Fab	
10	M1071-01-10	Base Fabrication	01 No.	Ms Fab	
11	M1071-01-11	Carriage Fabrication	01 No.	Ms Fab	
12	M1071-01-12	Gearbox Mounting Bracket	01 No.	Ms Fab	
13	M1071-01-13	Double Strand Sprocket	05 Nos.	En9	
14	M1071-01-14	Idler Roller Base	01 No.	Ms Fab	
15	M1071-01-15	Idler Roller Lead Screw	01 No.	En8	
16	M1071-01-16	Idler Roller Pb Nut	01 No.	Pb	
17	M1071-01-17	Idler Roller Ci-Bracket	02 Nos.	Ci-20	
18	M1071-01-18	Idler Roller Carriage	02 Nos.	Ms	
19	M1071-01-19	Idler Roller Bearing Housing	02 Nos	Ms Fab	
20	M1071-01-20	L- Bracket	04 Nos.	Ci-20	
21	M1071-01-21	Idler Roller Pin	02 Nos.	En8	
22	M1071-01-22	Idler Roller Spacer	02 Nos.	Ms	
23	M1071-01-23	Idler Roller Washer	05 Nos.	Ms	
24	M1071-01-24	Nut Housing Holder	02 Nos.	Ms Fab	
25	M1071-01-25	Locking Plate	04 Nos.	Ms	
26	M1071-01-26	Block Mounting Pad	04 Nos.	Ms	

Group No-02					
27	M1071-02-01	Top Platform Fabrication	01 No.	Ms Fab	
28	M1071-02-01s	Top Platform Structure	01 No.	Ms Fab	
29	M1071-02-02	Slide Platform	02 Nos.	Ms Fab	
30	M1071-02-03	Block Mounting Bracket	04 Nos.	Ms Fab	
31	M1071-02-04	Hinged Cover For Ladder	01 No.	Ms Fab	
32	M1071-02-05	Sprocket Shaft	02 Nos.	En8	
33	M1071-02-06	Single Sprocket	02 Nos.	En9	
34	M1071-02-07	Gearbox Mounting Bracket	02 Nos.	Ms Fab.	
35	M1071-02-08	Column Top Plate	04 Nos.	Ms	

3.7 Production Drawing Type

General Arrangement drawings, Assembly drawings, and Manufacturing items drawings, these three types of drawings serve different purposes in the manufacturing and production process:

General Arrangement Drawing: General Arrangement drawings provide an overview of the entire product or system. They focus on showing the overall layout, dimensions, and relationships between major components. In our drawing Fig no. 3.7(a,b,c and d) are the GA drawing.

Assembly Drawing: Assembly drawings provide detailed information about how various components and parts come together to form the complete product or system. They are crucial for the assembly process. In our drawing Fig no. 3.7(e, f, g and h) is assembly drawing.

Manufacturing Items Drawing: Manufacturing items drawings (often referred to as detailed or part drawings) provide in-depth information about each individual component or part of the product. These drawings are used by manufacturers to produce the parts accurately. Only

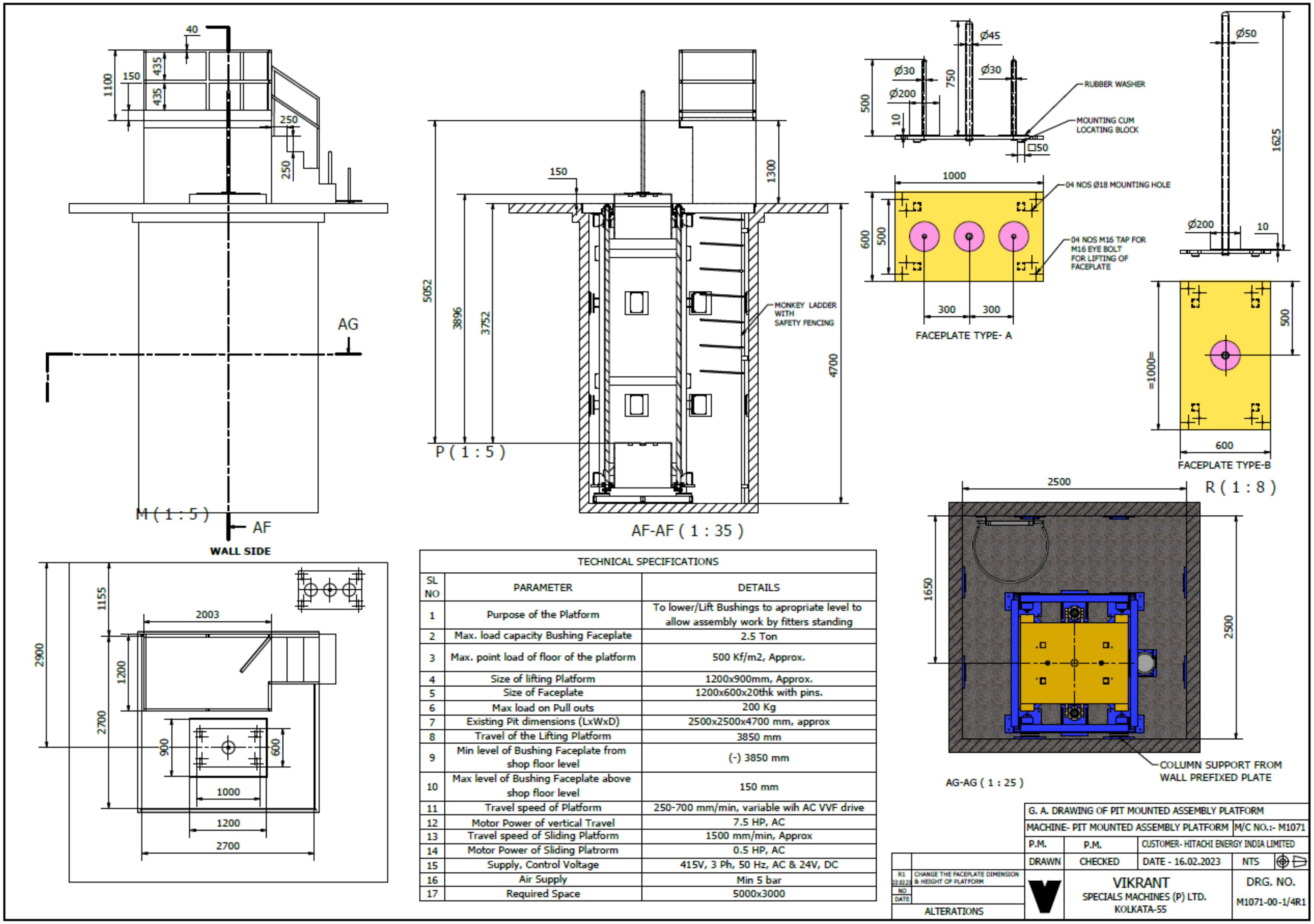

TECHNICAL SPECIFICATIONS

SL NO	PARAMETER	DETAILS
1	Purpose of the Platform	To lower/Lift Bushings to apropriate level to allow assembly work by fitters standing
2	Max. load capacity Bushing Faceplate	2.5 Ton
3	Max. point load of floor of the platform	500 Kf/m2, Approx.
4	Size of lifting Platform	1200x900mm, Approx.
5	Size of Faceplate	1200x600x20thk with pins.
6	Max load on Pull outs	200 Kg
7	Existing Pit dimensions (LxWxD)	2500x2500x4700 mm, approx
8	Travel of the Lifting Platform	3850 mm
9	Min level of Bushing Faceplate from shop floor level	(-) 3850 mm
10	Max level of Bushing Faceplate above shop floor level	150 mm
11	Travel speed of Platform	250-700 mm/min, variable wih AC VVF drive
12	Motor Power of vertical Travel	7.5 HP, AC
13	Travel speed of Sliding Platform	1500 mm/min, Approx
14	Motor Power of Sliding Platrorm	0.5 HP, AC
15	Supply, Control Voltage	415V, 3 Ph, 50 Hz, AC & 24V, DC
16	Air Supply	Min 5 bar
17	Required Space	5000x3000

Fig.3.7 (a) General Arrangement drawing

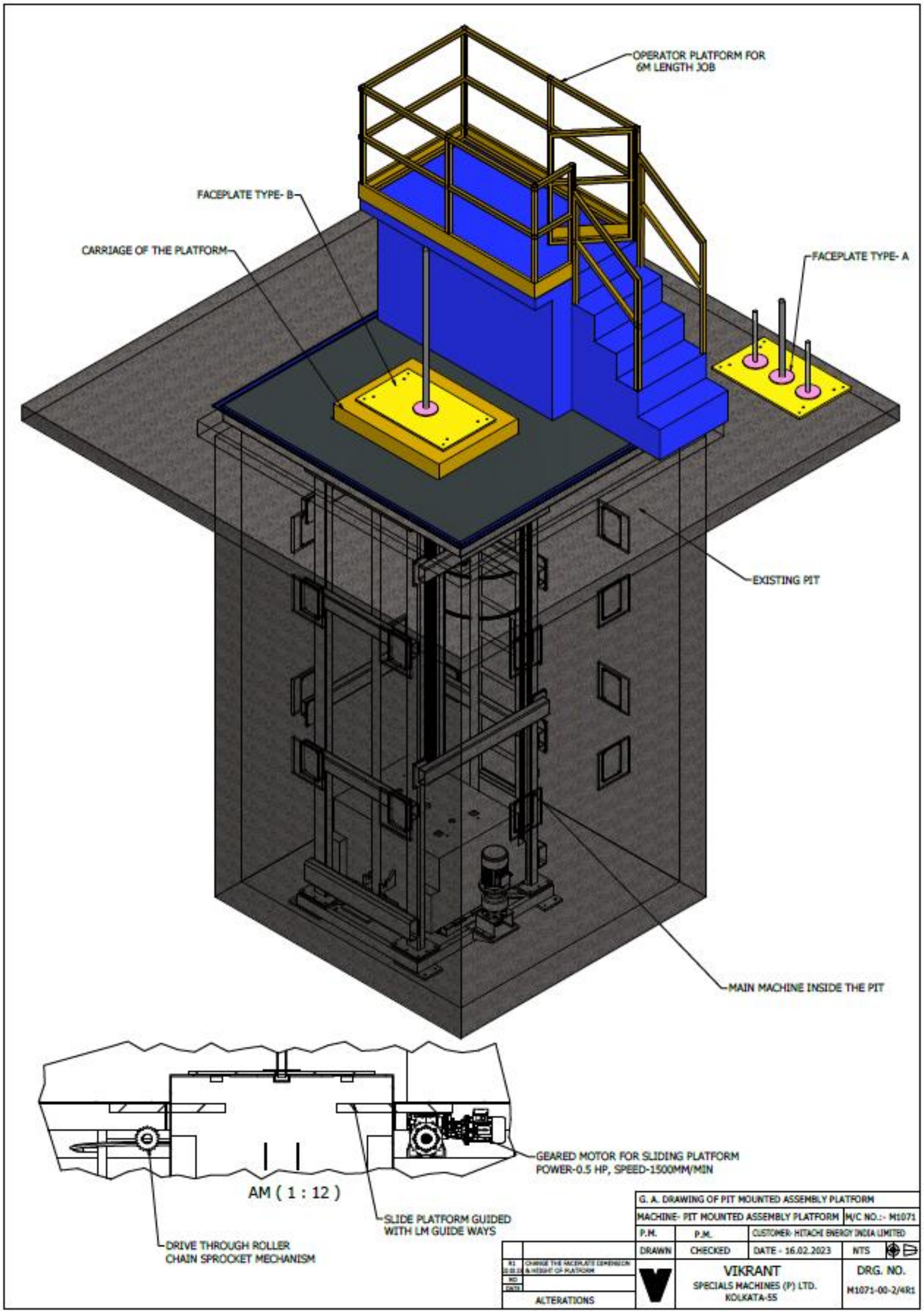

Fig.3.7. (b) General Arrangement drawing

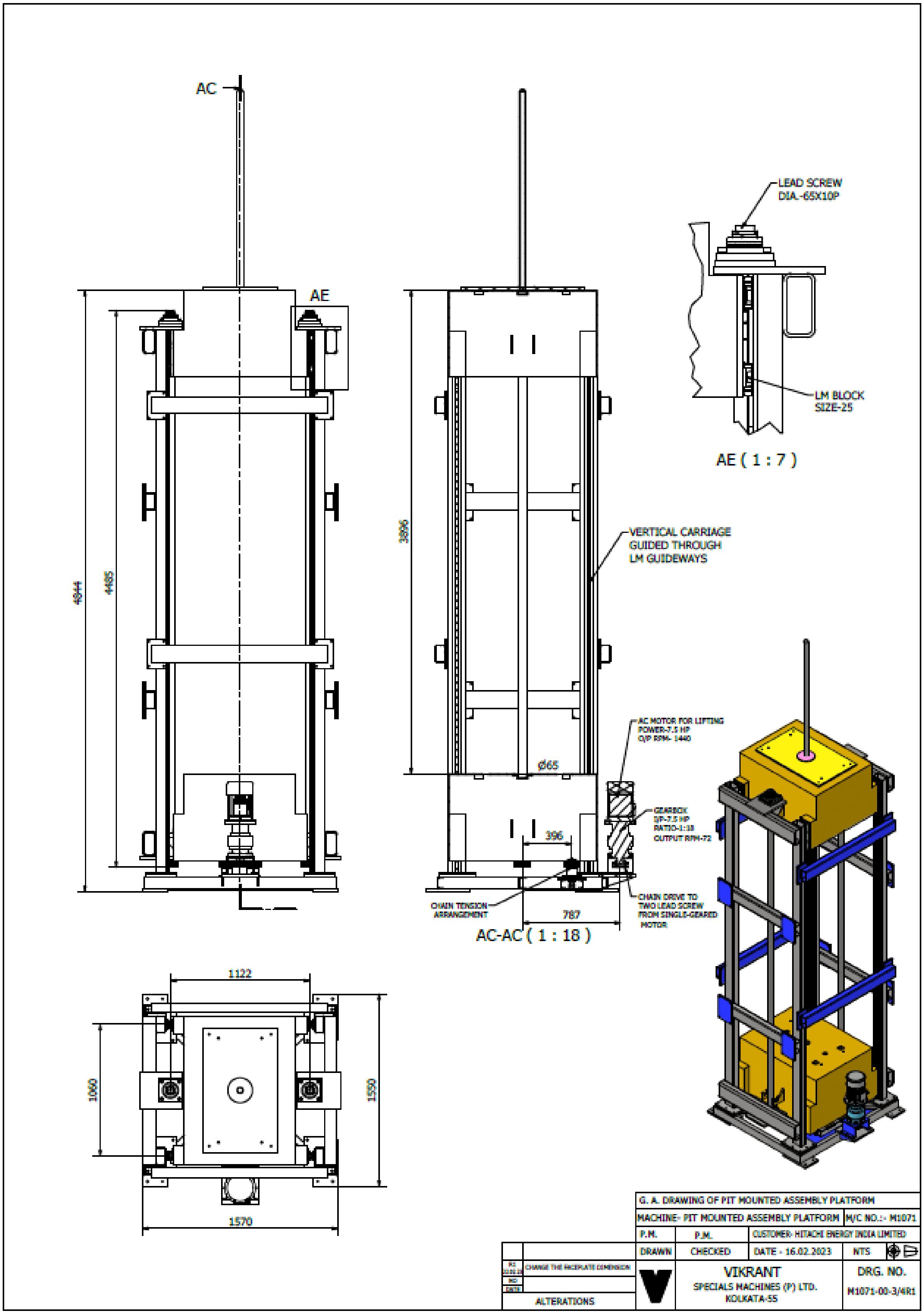

Fig.3.6. (c) General Arrangement drawing

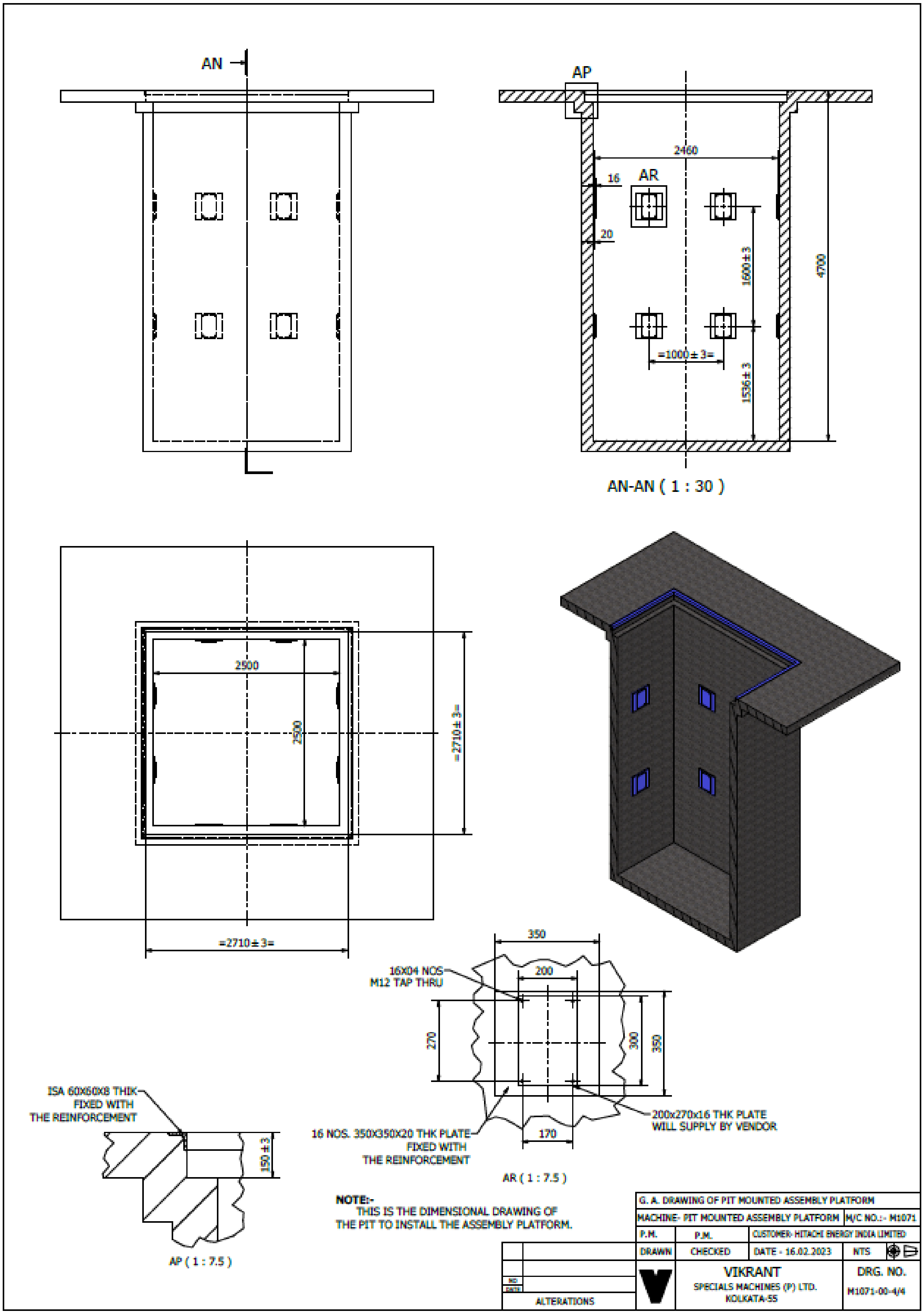

Fig.3.7 (d) General Arrangement drawing

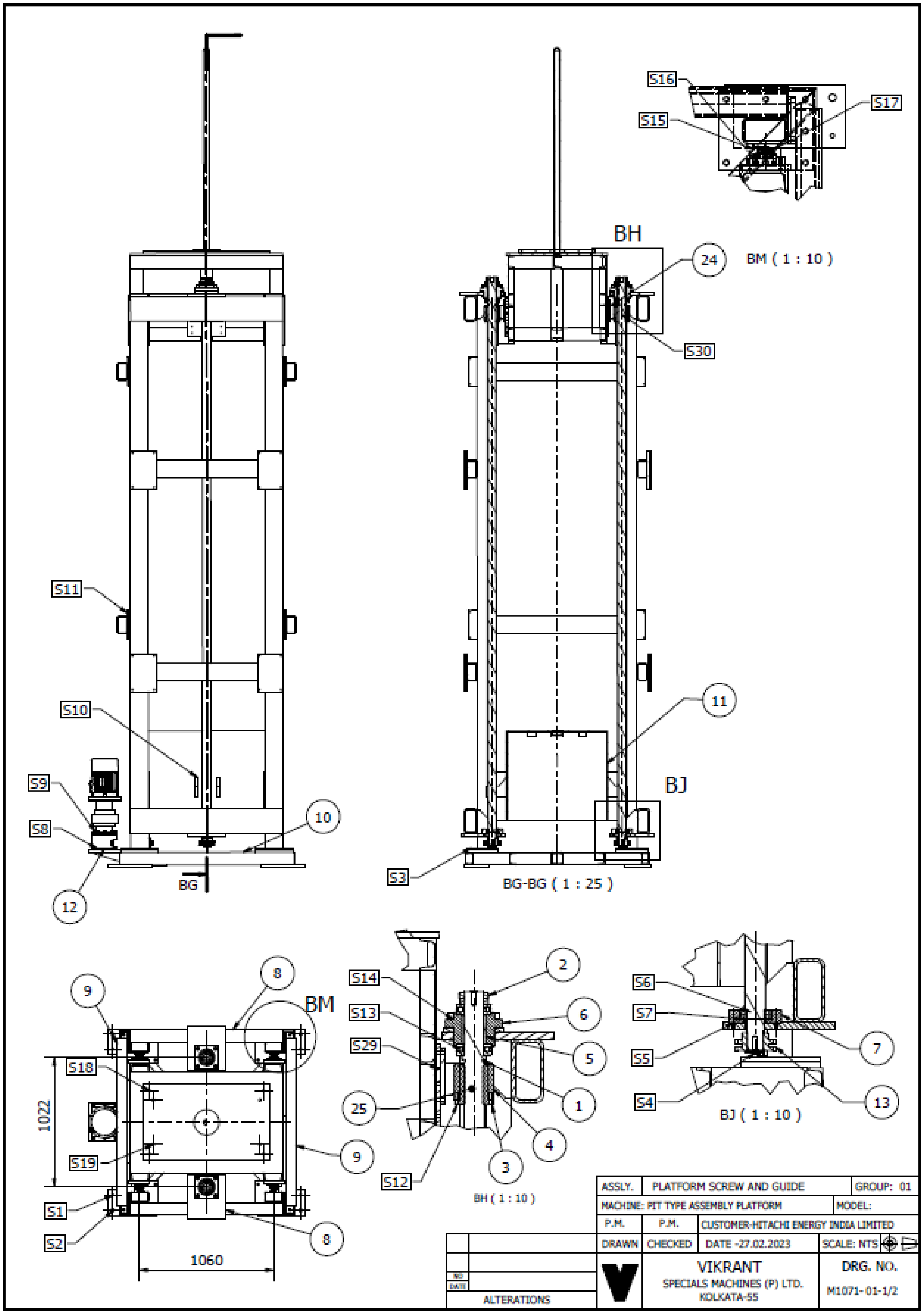

Fig.3.7 (e) Assembly drawing of Platform Screw and Guide

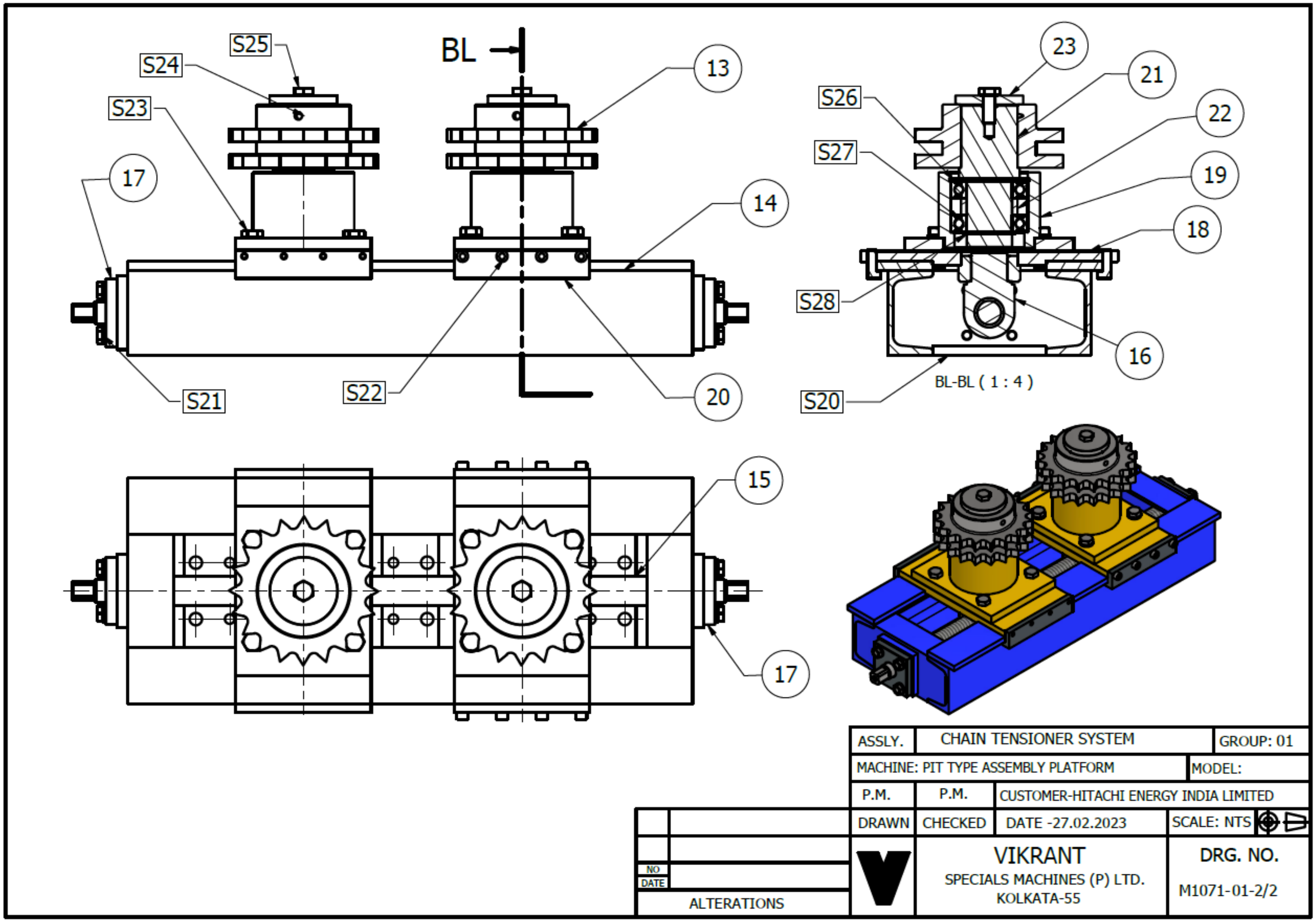

Fig.3.7 (f) Assembly drawing of Chain Tensioner System

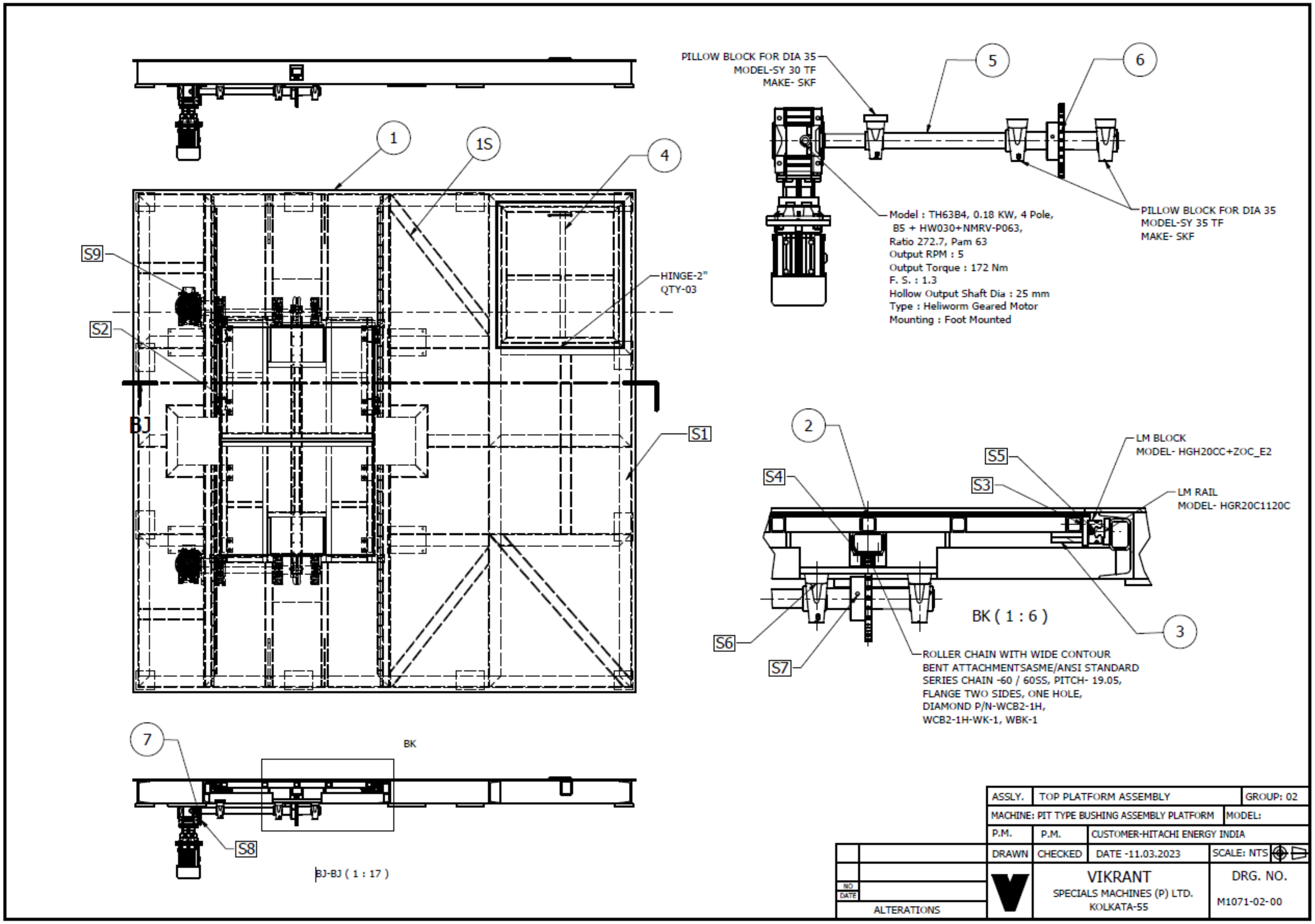

Fig.3.7 (g) Assembly drawing Top Platform Assembly

3.8 Connection with Main Nut to Safety Nut Assembly

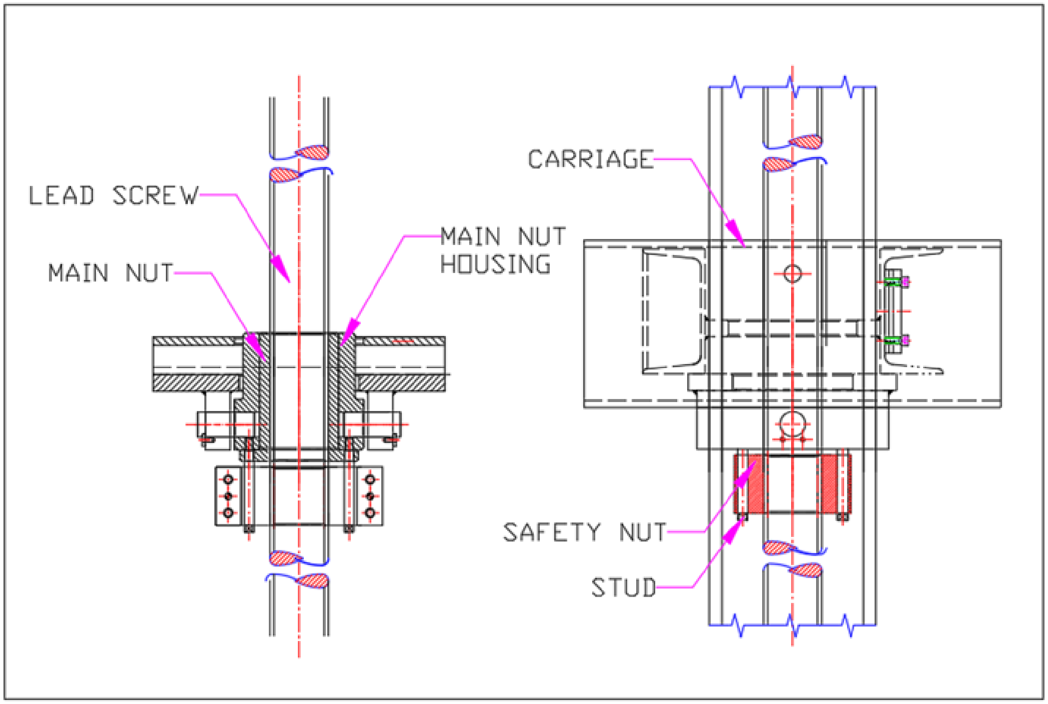

Fig.3.7 (h) Assembly drawing of Floating Nut and Safety Nut

Floating Nut Mounting

The lead screw is suspended from a fixed-type bush-bearing housing, allowing only rotational movement. Two heavy-duty thrust ball bearings, numbered 2211, are responsible for handling axial loads, while the bush takes care of radial loads. The bush-bearing housing is securely attached to the top of a column using a robust fabricated bracket. To guide the carriage's vertical motion, an LM guide rail is affixed to both the column and the carriage. In cases where misalignment occurs due to assembly errors, or when there's ovality in the lengthy lead screw, or deflection in the column, we have implemented a solution by introducing a floating nut. In this arrangement, the nut is housed within a unit fixed to the carriage using a pin. This setup ensures lateral clearance, allowing the nut housing to float, even under loaded conditions.

Safety Nut Mounting

A safety nut is essentially an additional nut that moves freely alongside the main nut while maintaining a clear gap. It is secured in place using four studs. The purpose of this safety nut is to provide support in case of unforeseen damage to the main nut. Within our system, we have integrated an electrical sensor that becomes active when the gap between the main nut and the safety nut decreases. This sensor serves as an indicator for the maintenance team, signaling them to inspect and potentially replace the main nut. In this way, the safety nut fundamentally serves as a protective measure, ensuring the reliability and safety of the system by providing a backup mechanism in case of issues with the main nut.

Chapter 4

4.1 Stress analysis simulation of major component

We have done the Stress analysis with Autodesk Inventor software. Stress analysis in Autodesk Inventor is a process that allows you to simulate and analyze how a designed part or assembly will behave under various loads and boundary conditions. This analysis helps you understand factors such as stress distribution, deformation, safety factors, and areas of potential failure in your design. Here are the basic steps to perform stress analysis in Autodesk Inventor:

Create or Open a Design:

Start by either creating a new 3D model or opening an existing design in Autodesk Inventor.

Define Material Properties:

Assign material properties to your model, including Young's Modulus and Poisson's Ratio, which are essential for stress analysis.

Define Boundary Conditions:

Specify how your model is constrained in your analysis by setting boundary conditions. Common boundary conditions include fixed constraints, roller constraints, or displacement constraints.

Apply Loads:

Apply the loads that your design will experience in the real world. These can include forces, pressures, torques, or thermal loads.

Mesh Generation:

Divide your model into small elements (meshing) to approximate the behaviour of the material. Inventor's simulation tools will use these elements to calculate stress and deformation.

Set Up the Analysis:

Access the Stress Analysis environment in Inventor, typically located under the "Environment" or "Simulation" tab. Create a new static or dynamic analysis, depending on your needs.

Specify Analysis Settings:

Configure settings such as material properties, mesh refinement, and solver options.

Run the Analysis:

Start the analysis to calculate stress, displacement, and other relevant results based on the applied loads and boundary conditions.

Review Results:

After the analysis is complete, review the results to understand how your design behaves under the specified conditions. You can visualize stress distribution, deformation, safety factors, and more.

Iterate and Optimize:

Use the analysis results to make design improvements, optimize your model, or identify areas of concern. You may need to make design changes and repeat the analysis to achieve the desired performance and safety.

Generate Reports:

Autodesk Inventor allows you to create reports summarizing the analysis setup, results, and findings.

Finalize Design:

Once you are satisfied with the analysis results and the design meets safety and performance criteria, you can finalize your design for production. Autodesk Inventor provides powerful simulation tools to help engineers and designers validate their designs and ensure they meet performance and safety requirements.

4.2 Stress analysis report of major items

4.2.1 <u>Part Number</u>: M1071-01-01, Lead Screw

The leadscrew is composed of Steel Alloy with the following physical properties: Mass Density - 7.73g/cm^3, Yield Strength - 250 MPa, Ultimate Tensile Strength - 400 MPa, Young's Modulus - 205 GPa, Poisson's Ratio - 0.3 ul, and Shear Modulus - 78.8462 GPa. The minimum von Mises stress for the leadscrew is simulated using Autodesk Inventor and is depicted in Fig. 4.2.1 (a), while the maximum von Mises stress is represented in Fig. 4.2.1 (b).

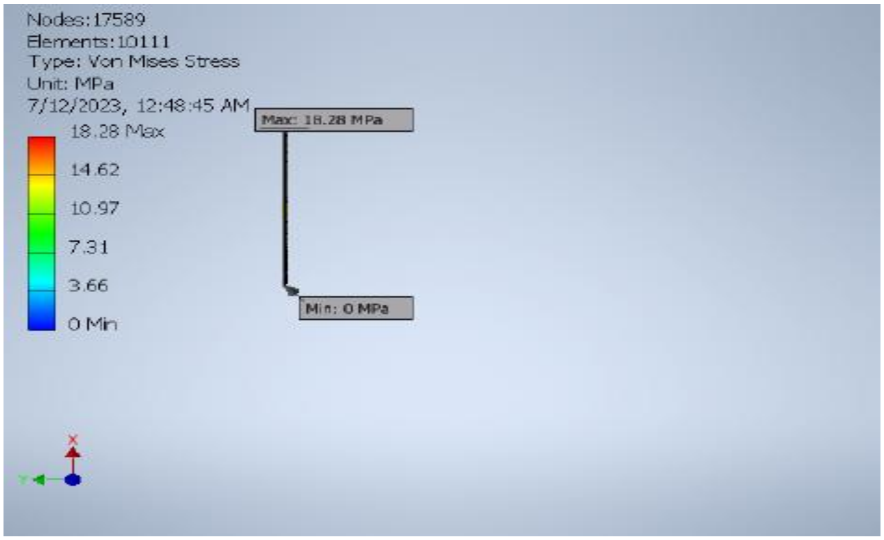

Fig. 4.2.1 (a) Von Mises Stress minimum of Leadscrew

Fig. 4.2.1 (b) Von Mises Stress maximum of Leadscrew

The minimum 1St Principle Stress for the leadscrew is simulated using Autodesk Inventor and is depicted in Fig. 4.2.1 (c), while the maximum 1St Principle Stress is represented in Fig. 4.2.1 (d).and the minimum 3rd Principle Stress for the leadscrew is simulated using Autodesk Inventor and is depicted in Fig. 4.2.1 (e), while the maximum 3rdPrinciple Stress is represented in Fig. 4.2.1 (f).

1StPrinciple Stress:

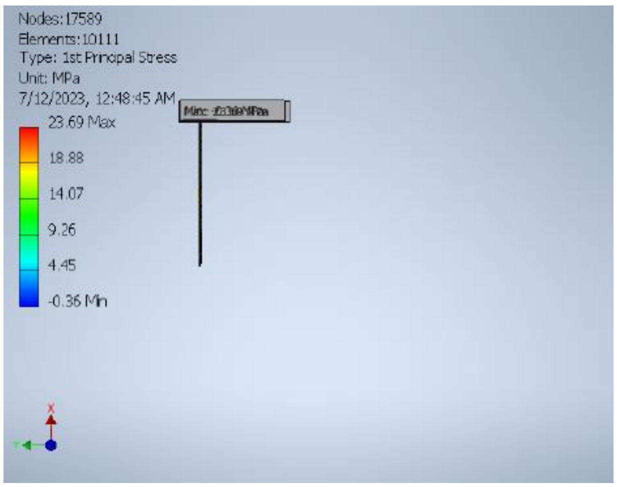

Fig. 4.2.1 (c) 1St Principle Stress minimum of Leadscrew

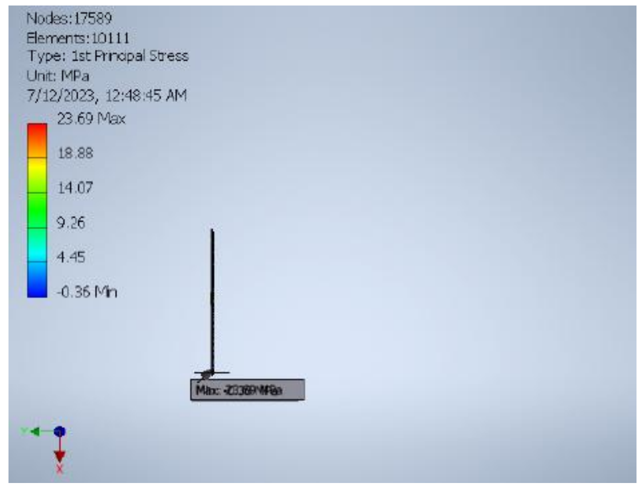

Fig. 4.2.1 (d) 1St Principle Stress maximum of Leadscrew

3rd Principle Stress:

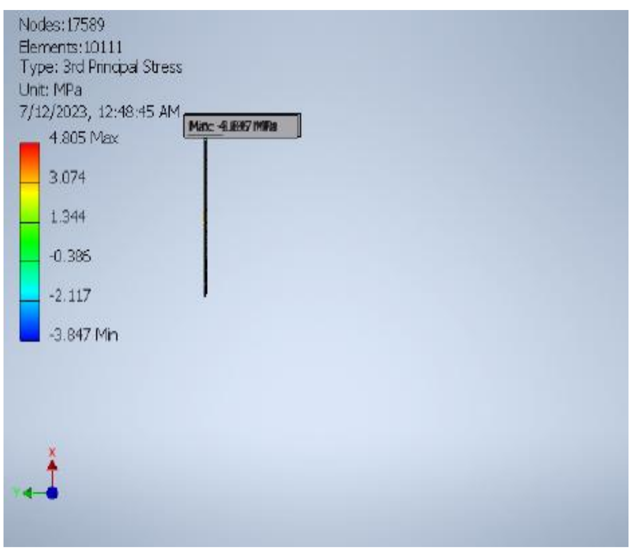

Fig. 4.2.1 (e) 3rd Principle Stress minimum of Leadscrew

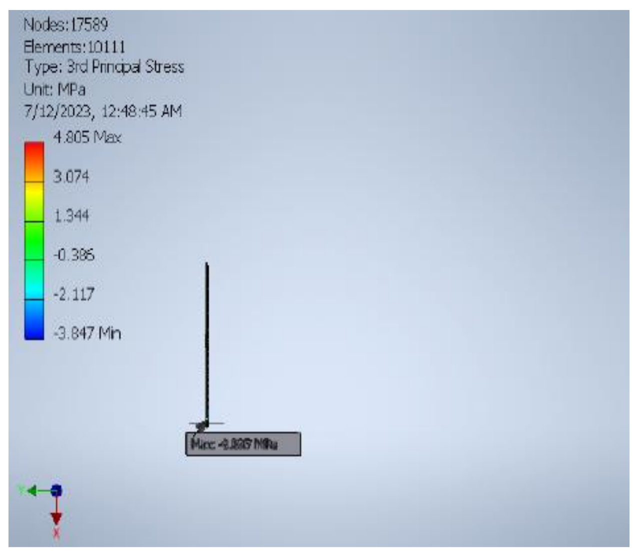

Fig. 4.2.1 (f) 3rd Principle Stress maximum of Leadscrew

The minimum Displacement for the leadscrew is simulated using Autodesk Inventor and is depicted in Fig. 4.2.1 (g), while the maximum Displacement is represented in Fig. 4.2.1 (h)

<u>Displacement:</u>

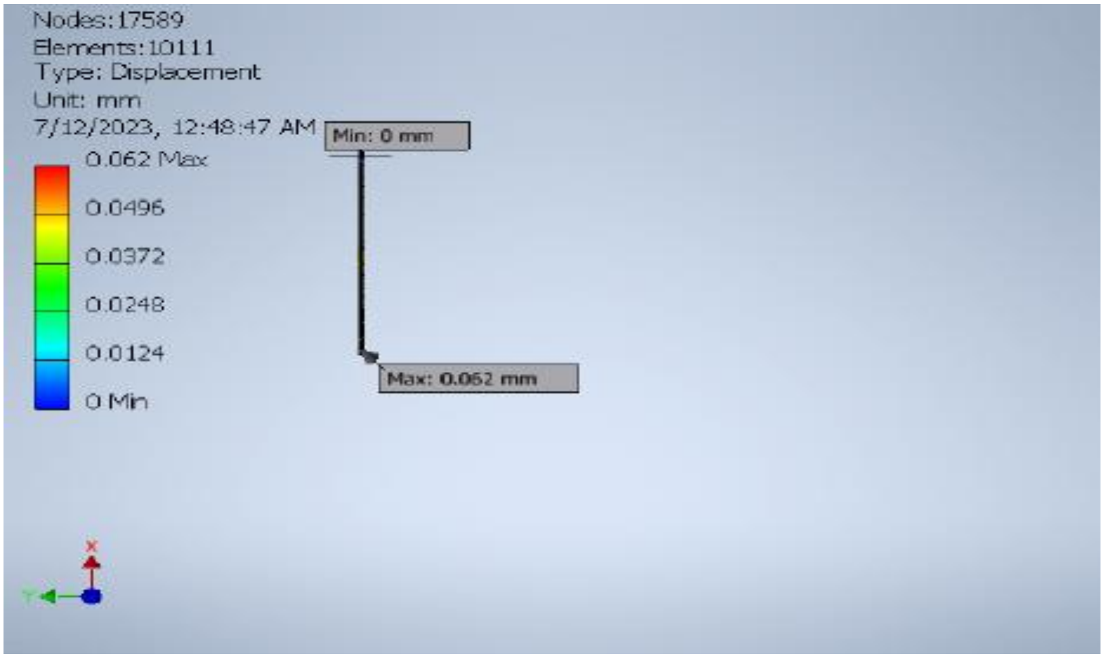

Fig. 4.2.1 (g) displacement minimum of Leadscrew

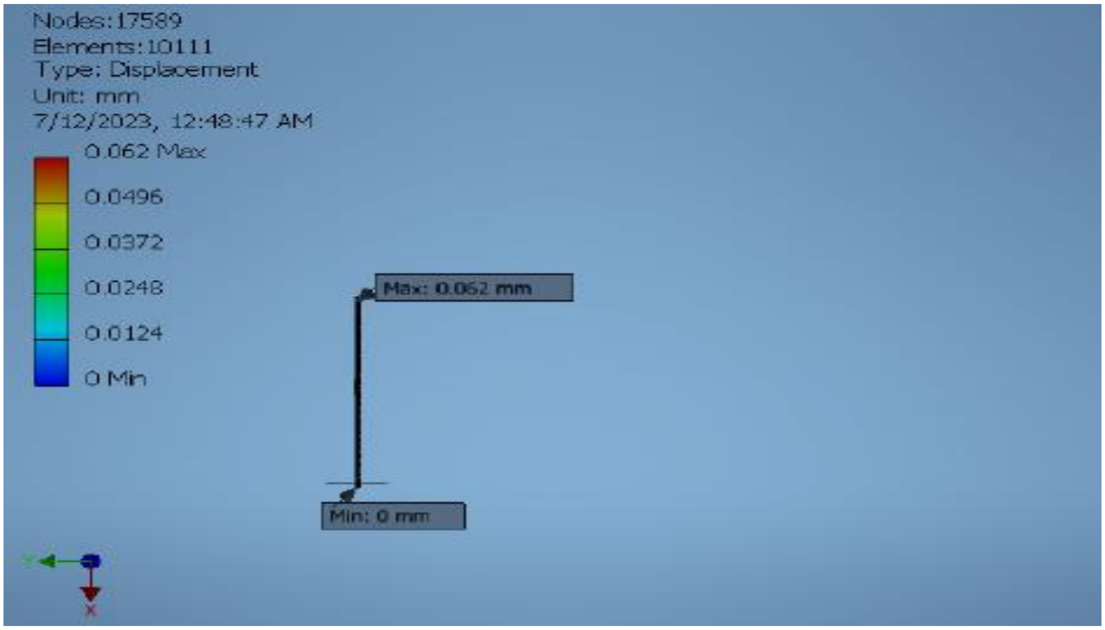

Fig. 4.2.1 (h) displacement maximum of Leadscrew

The minimum Safety Factor for the Nut Housing is simulated using Autodesk Inventor and is depicted in Fig. 4.2.2 (i), while the maximum Safety Factor is represented in Fig. 4.2.2 (j)

Safety Factor:

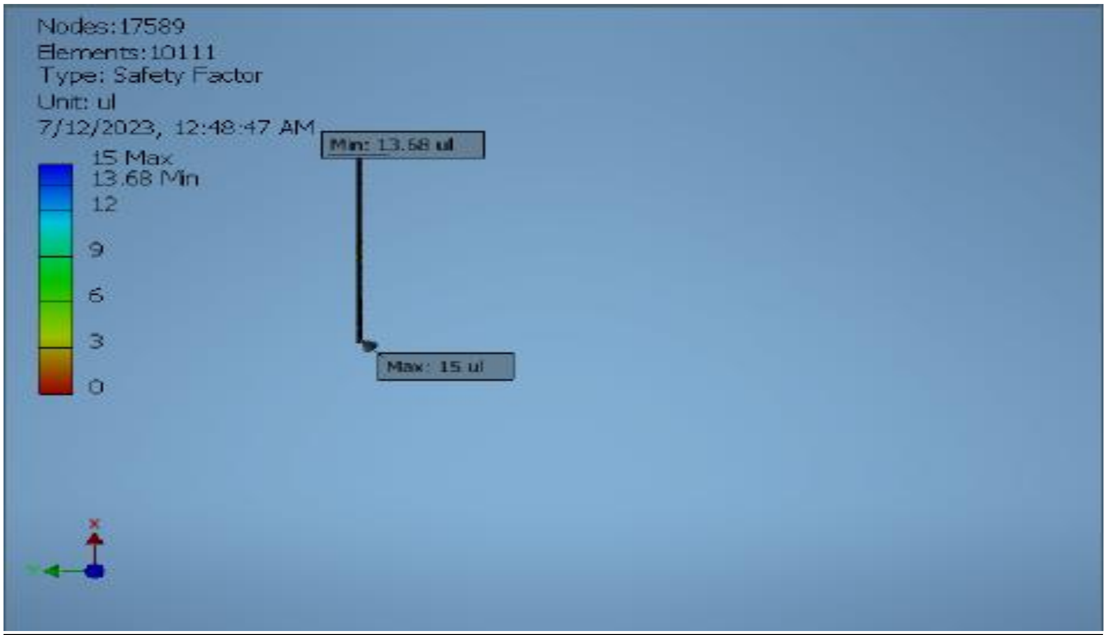

Fig. 4.2.1 (i) safety factor minimum of Leadscrew

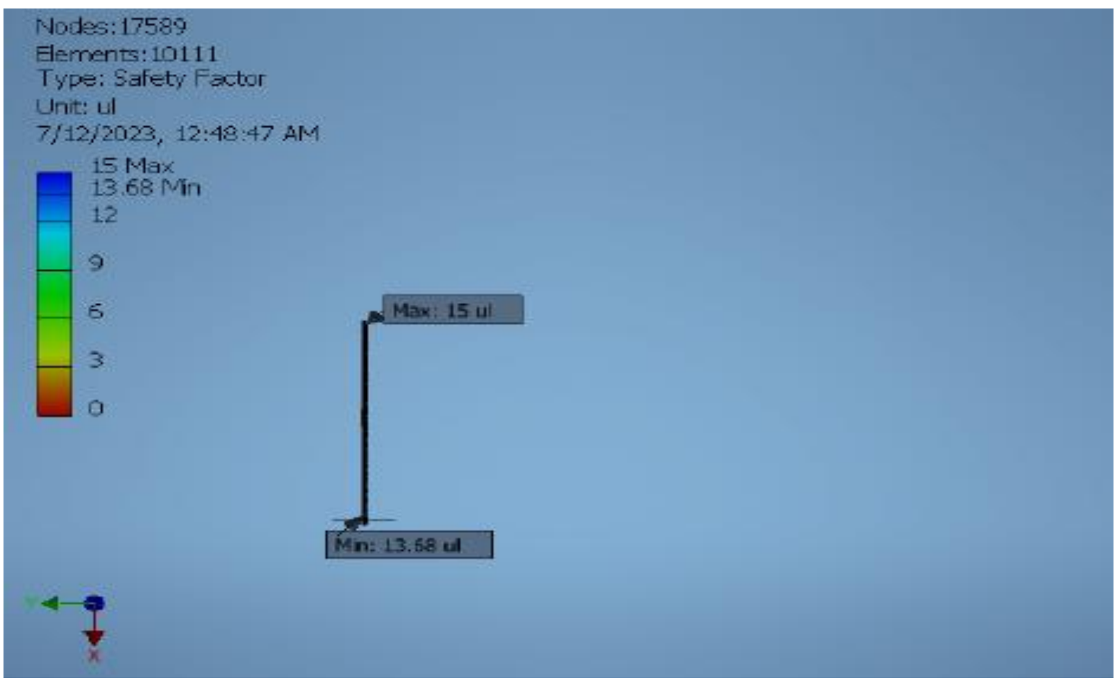

Fig. 4.2.1 (j) safety factor maximum of Leadscrew

4.2.2 **Part Number**: M1071-01-04, Nut Housing

Material : Mild Steel, Mass Density- 7.85g/cm^3, Yield Strength- 207 MPa ,Ultimate Tensile Strength- 345 MPa, Young's Modulus-220 GPa, Poisson's Ratio- 0.275 ul, Shear Modulus-86.2745 GPa.The minimum von Mises stress for the Nut Housing is simulated using Autodesk Inventor and is depicted in Fig. 4.2.2 (a), while the maximum von Mises stress is represented in Fig. 4.2.2 (b).

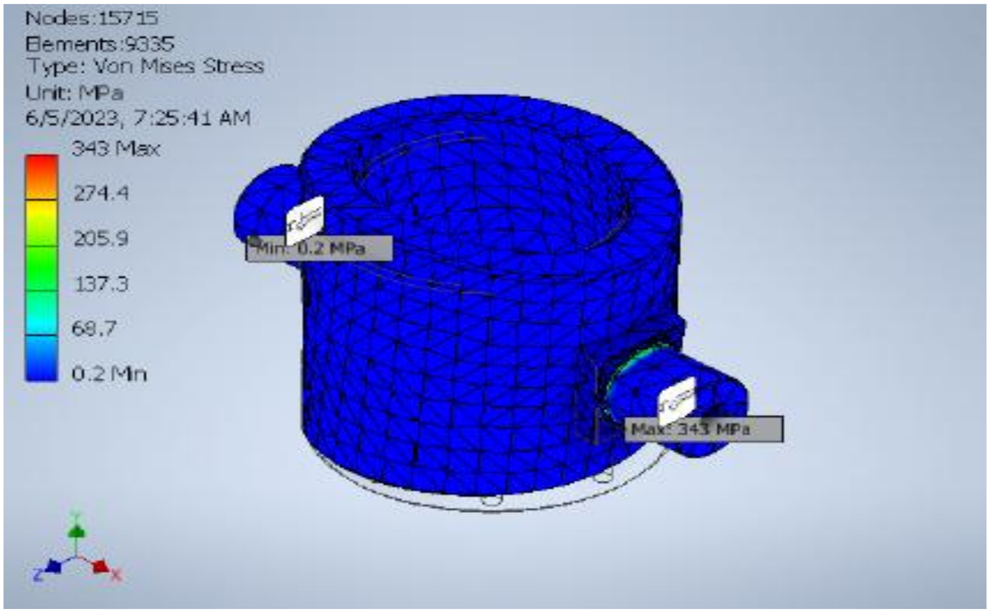

Fig. 4.2.2 (a) Von Mises Stress minimum of Nut Housing

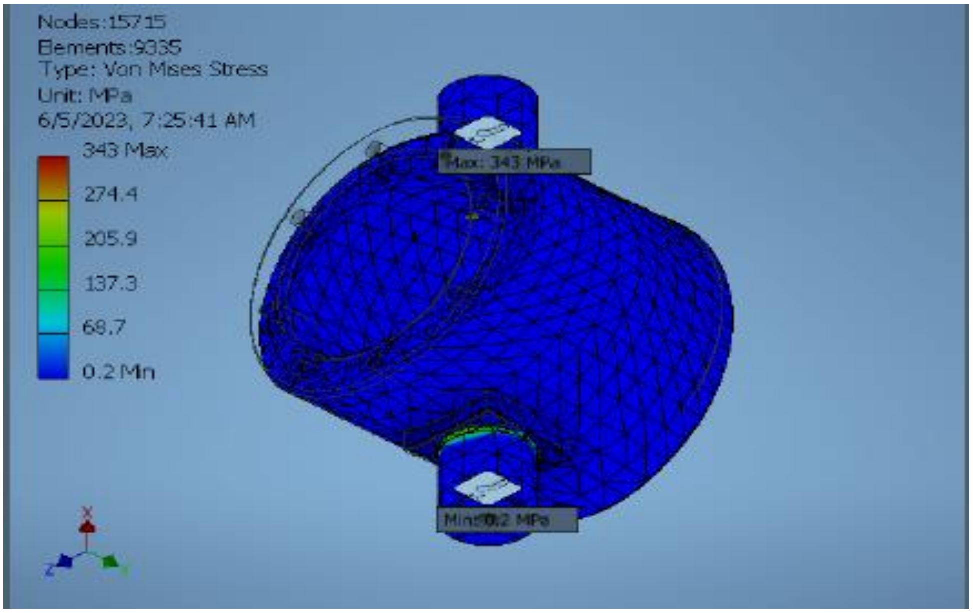

Fig. 4.2.2 (b) Von Mises Stress maximum of Nut Housing

The minimum 1St Principle Stress for the Nut Housing is simulated using Autodesk Inventor and is depicted in Fig. 4.2.2 (c), while the maximum 1St Principle Stress is represented in Fig. 4.2.2 (d). and the minimum 3rd Principle Stress for the Nut Housing is simulated using Autodesk Inventor and is depicted in Fig. 4.2.2 (e), while the maximum 3rdPrinciple Stress is represented in Fig. 4.2.2 (f).

<u>1StPrinciple Stress:</u>

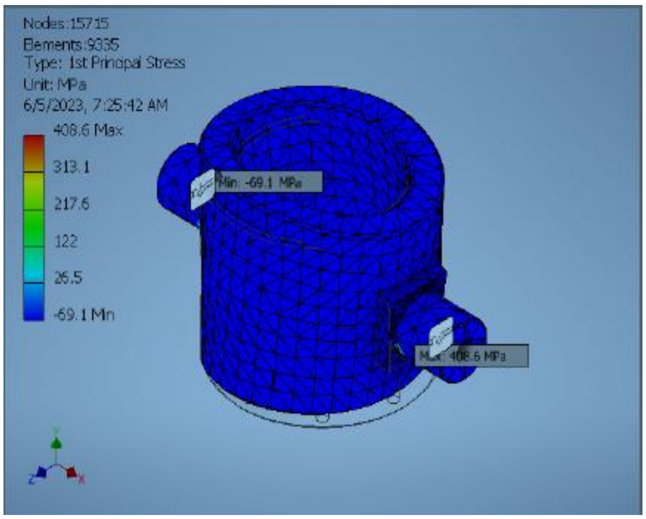

Fig. 4.2.2 (c) 1St Principle Stress minimum of Nut Housing

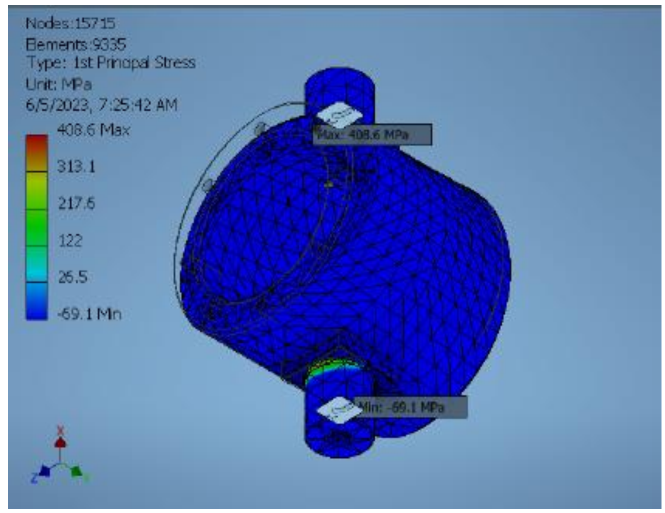

Fig. 4.2.2 (d) 1St Principle Stress maximum of Nut Housing

<u>3rd Principle Stress:</u>

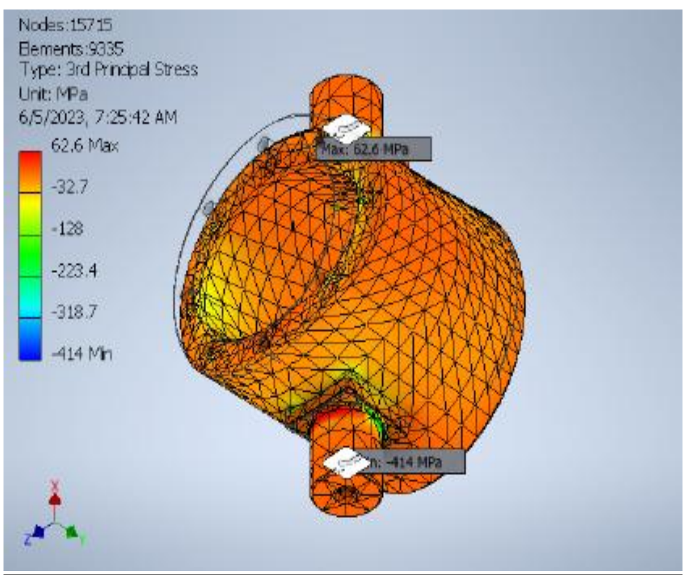

Fig. 4.2.2 (e) 3rd Principle Stress minimum of Nut Housing

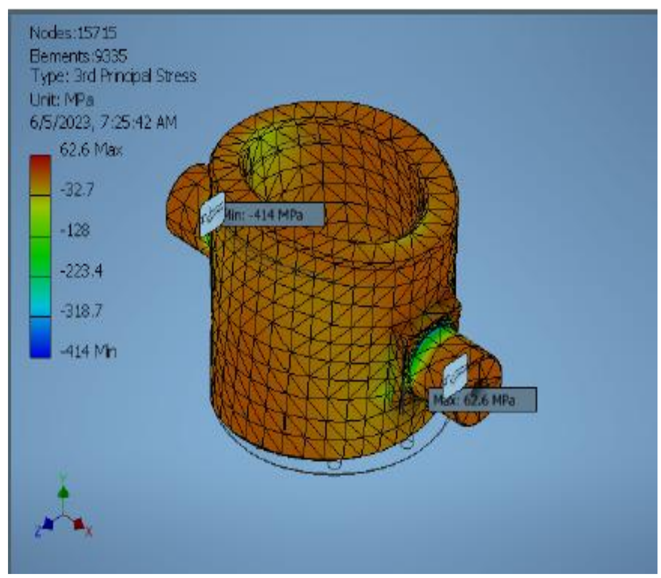

Fig. 4.2.2 (f) 3rd Principle Stress maximum of Nut Housing

The minimum displacementfor the Nut Housing is simulated using Autodesk Inventor and is depicted in Fig. 4.2.2 (g), while the maximum Displacementis represented in Fig. 4.2.2 (h)

Displacement:

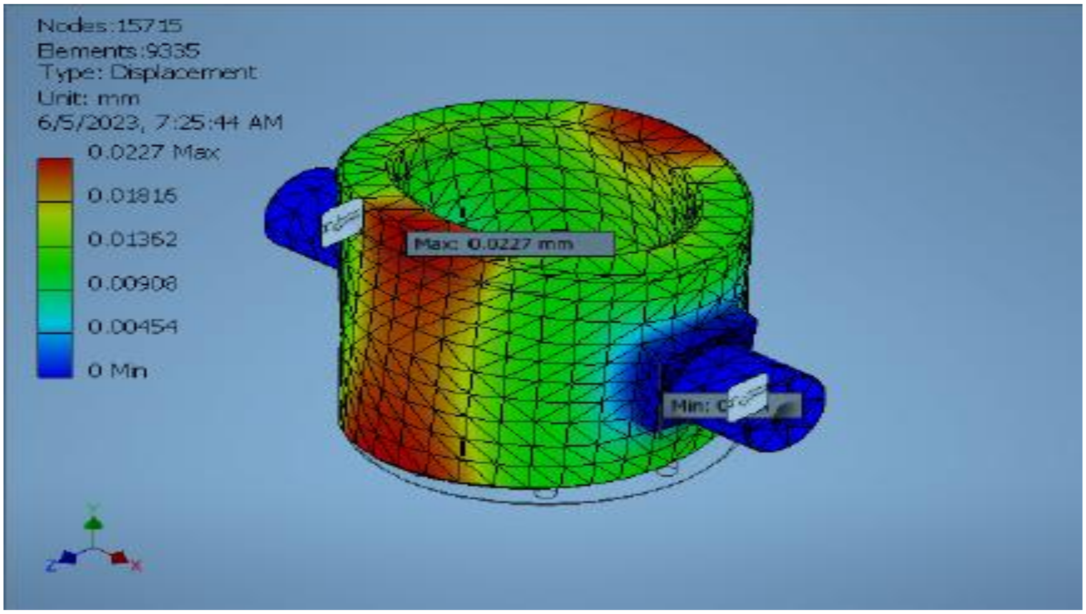

Fig. 4.2.2 (g) displacement minimum of Nut Housing

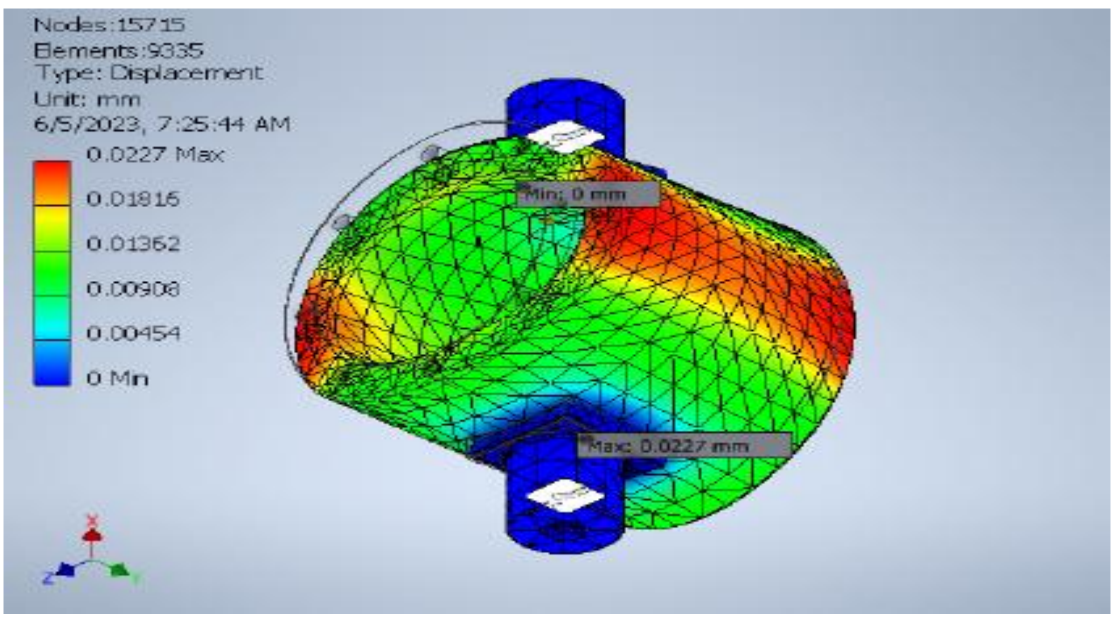

Fig. 4.2.2 (h) displacement maximum of Nut Housing

The minimum Safety Factor for the Nut Housing is simulated using Autodesk Inventor and is depicted in Fig. 4.2.2 (i), while the maximum Safety Factor is represented in Fig. 4.2.2 (j)

Safety Factor:

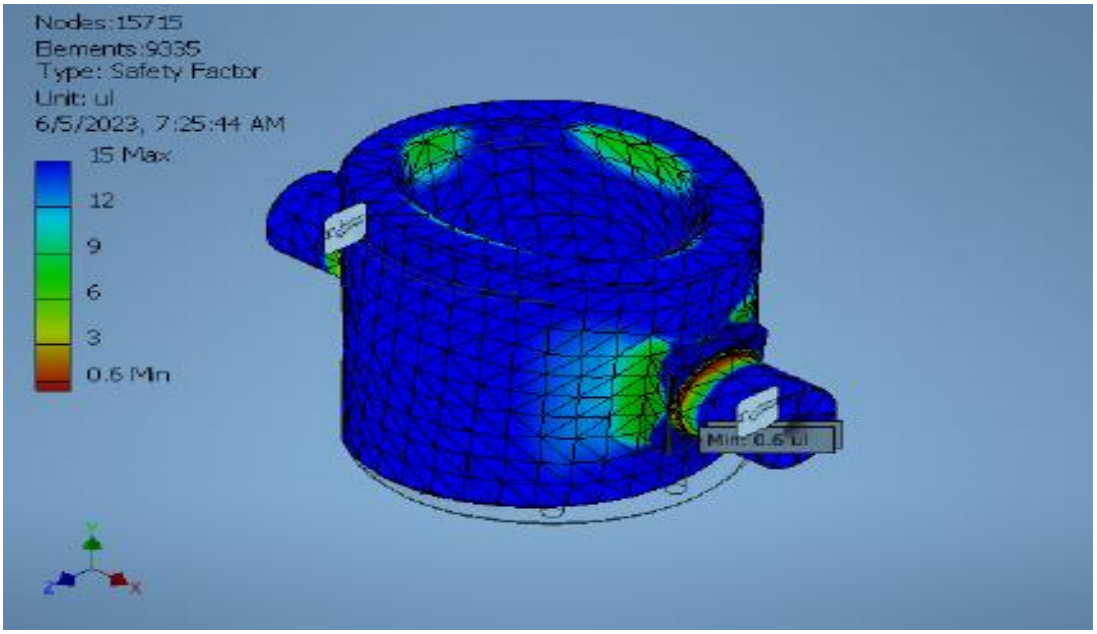

Fig. 4.2.2 (i) safety factor minimum of Nut Housing

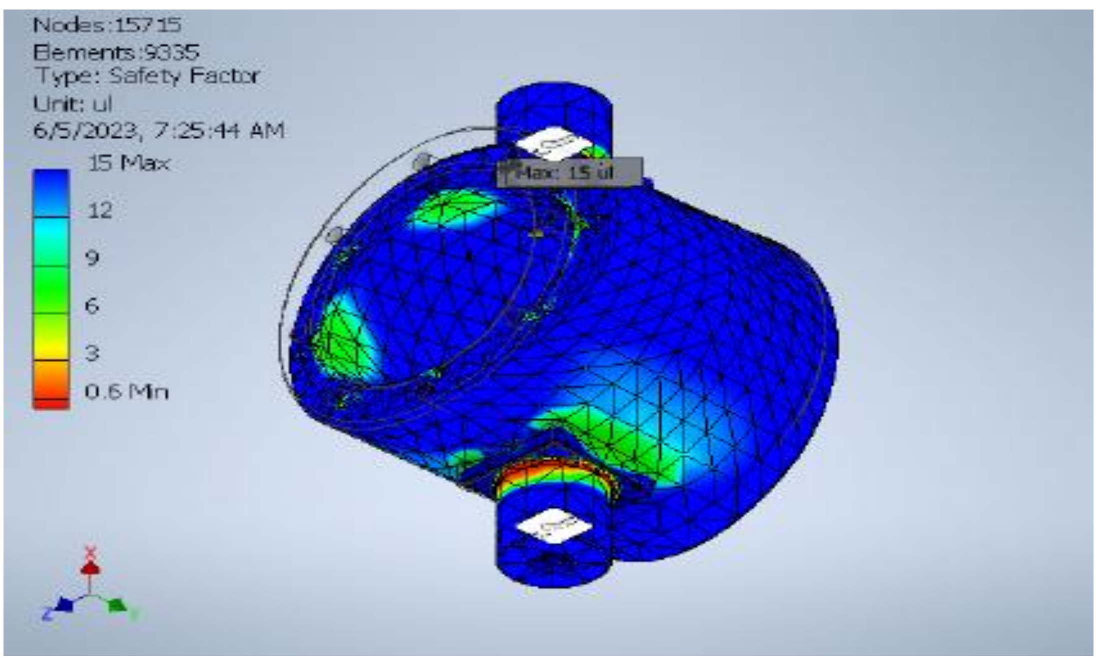

Fig. 4.2.2 (j) safety factor maximum of Nut Housing

4.2.3 **<u>Part Number</u>**: M1071-01-24, Nut Housing Holder

<u>Material</u> : Mild Steel, Mass Density- 7.85g/cm^3, Yield Strength- 207 MPa ,Ultimate Tensile Strength- 345 MPa, Young's Modulus-220 GPa, Poisson's Ratio- 0.275 ul, Shear Modulus- 86.2745 GPa. The minimum von Mises stress for the Nut Housing Holder is simulated using Autodesk Inventor and is depicted in Fig. 4.2.3 (a), while the maximum von Mises stress is represented in Fig. 4.2.3 (b).

<u>Von Mises Stress:</u>

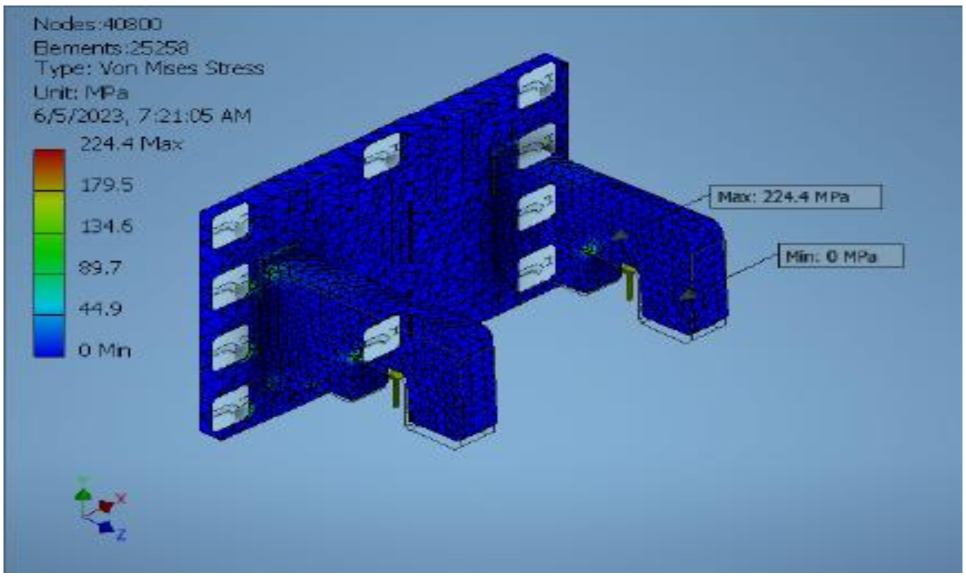

Fig. 4.2.3 (a) Von Mises Stress minimum of Nut Housing Holder

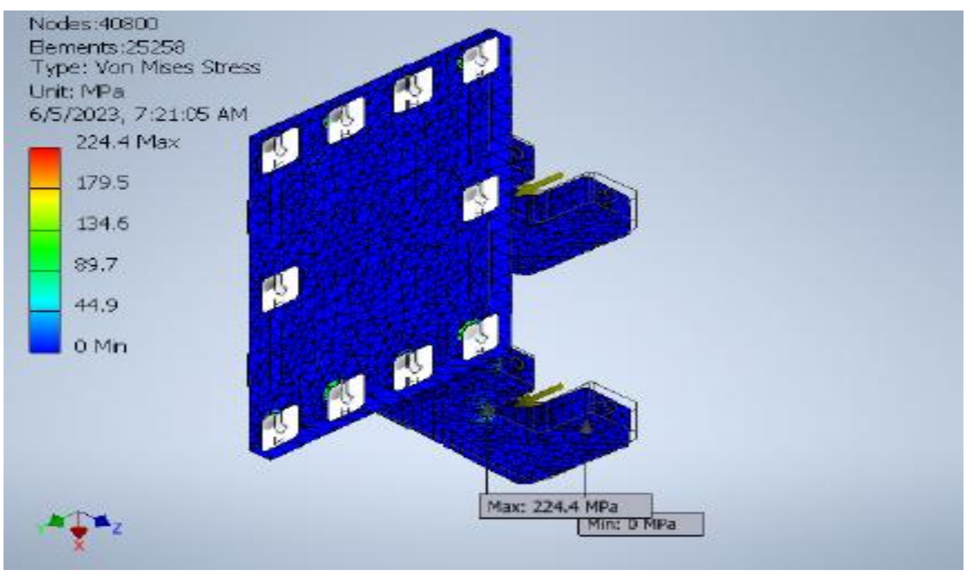

Fig. 4.2.3 (b) Von Mises Stress maximum of Nut Housing Holder

The minimum 1St Principle Stress for the Nut Housing Holder is simulated using Autodesk Inventor and is depicted in Fig. 4.2.3 (c), while the maximum 1St Principle Stress is represented in Fig. 4.2.3 (d). and the minimum 3rd Principle Stress for the Nut Housing Holder is simulated using Autodesk Inventor and is depicted in Fig. 4.2.3 (e), while the maximum 3rdPrinciple Stress is represented in Fig. 4.2.3 (f).

<u>1StPrinciple Stress:</u>

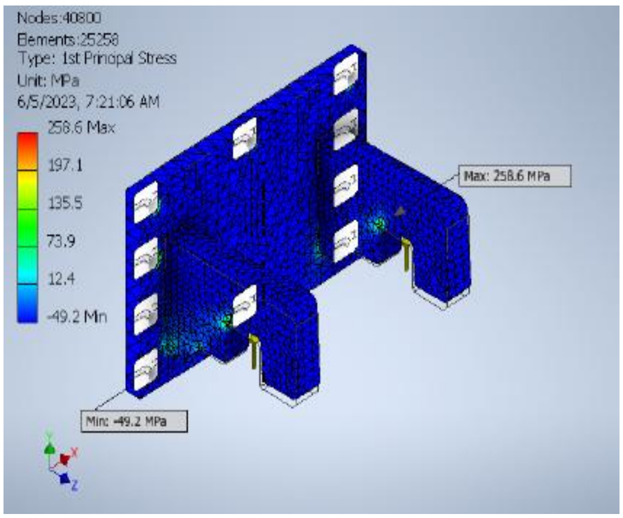

Fig. 4.2.3 (c) 1St Principle Stress minimum of Nut Housing Holder

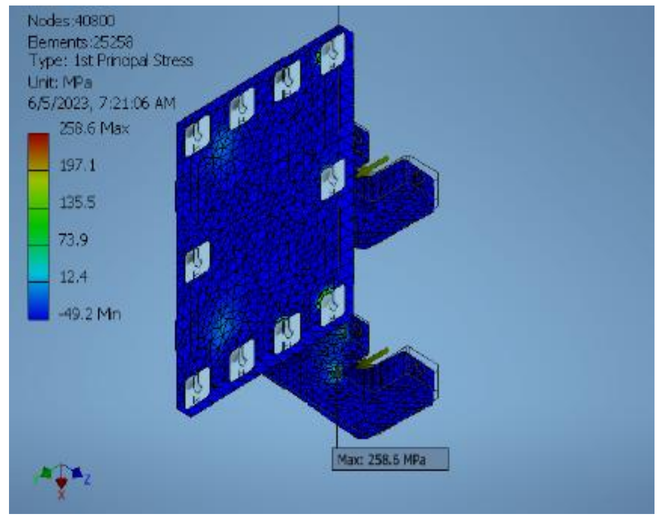

Fig. 4.2.3 (c) 1St Principle Stress maximum of Nut Housing Holder

<u>3rd Principle Stress:</u>

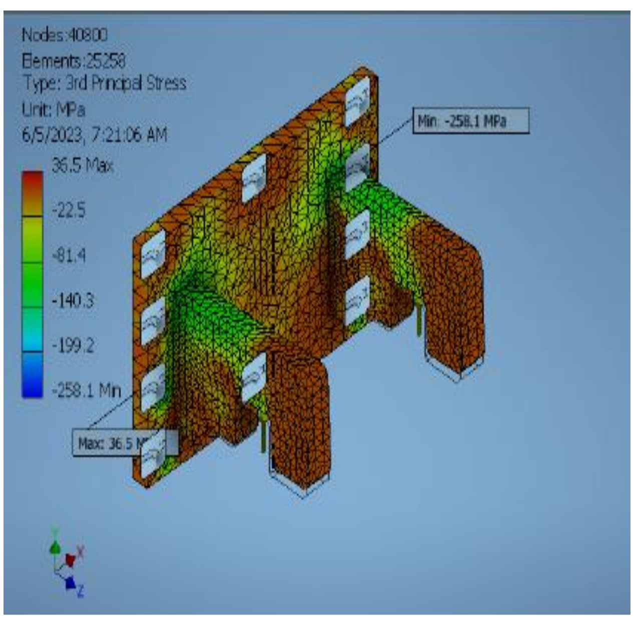

Fig. 4.2.3 (e) 3rdPrinciple Stress minimum of Nut Housing Holder

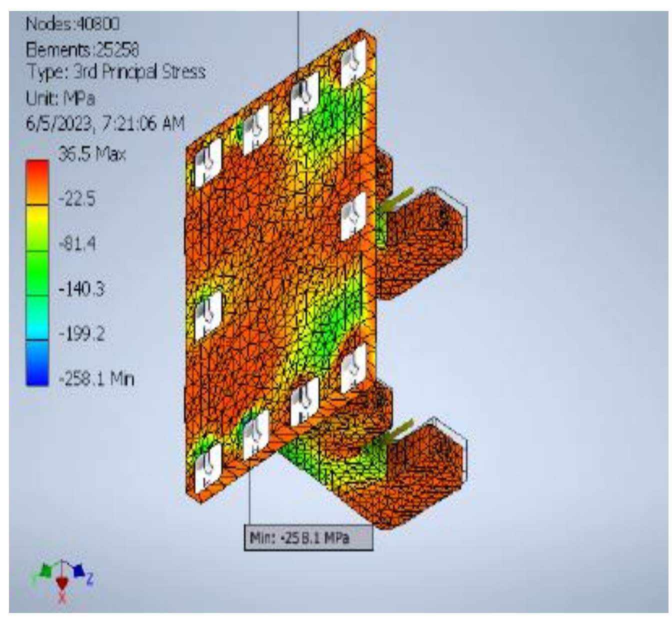

Fig. 4.2.3 (f) 3rd Principle Stress maximum of Nut Housing Holder

The minimum displacement or the Nut Housing Holder is simulated using Autodesk Inventor and is depicted in Fig. 4.2.3 (g), while the maximum Displacement is represented in Fig. 4.2.3 (h)

Displacement:

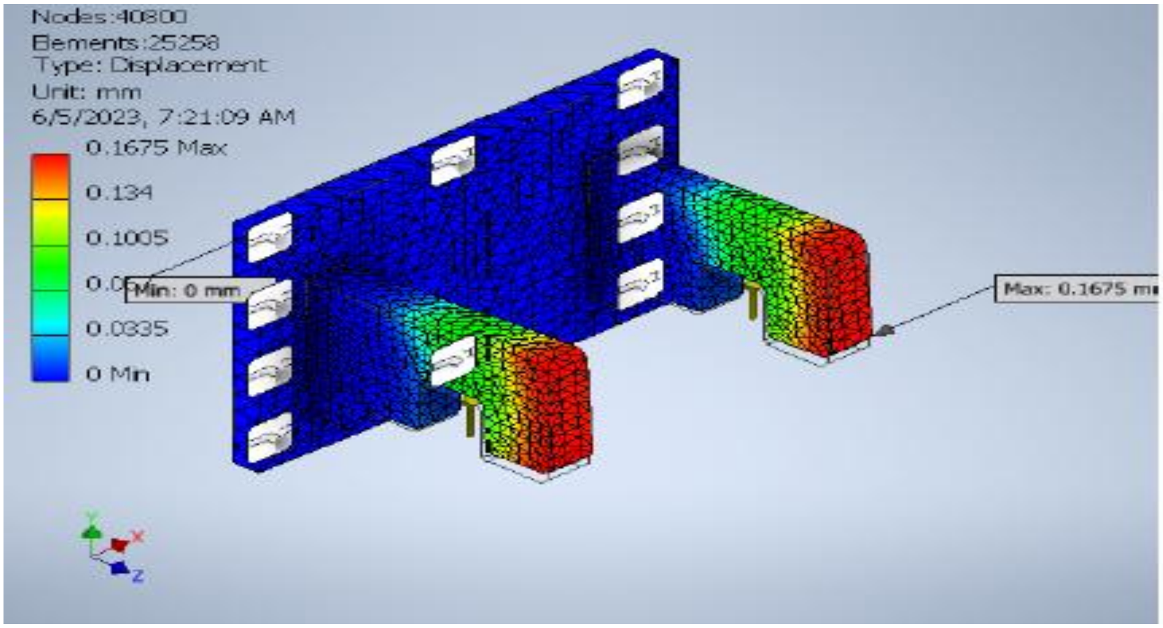

Fig. 4.2.3 (g) displacement minimum of Nut Housing Holder

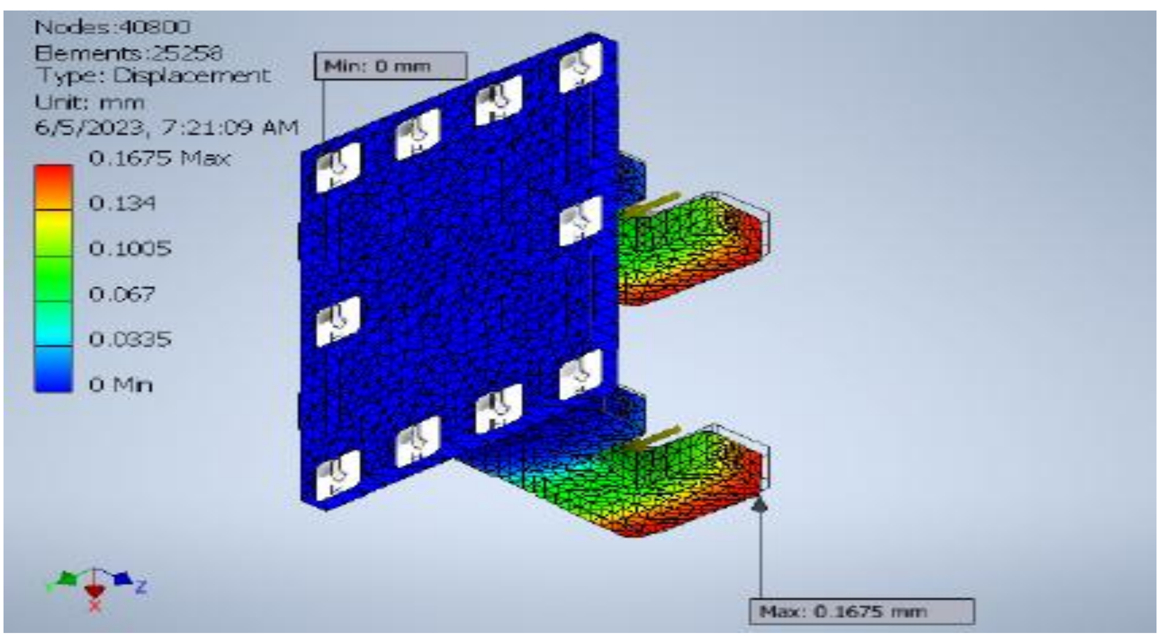

Fig. 4.2.3 (h) displacement maximum of Nut Housing Holder

The minimum Safety Factor for the Nut Housing Holder is simulated using Autodesk Inventor and is depicted in Fig. 4.2.3 (i), while the maximum Safety Factor is represented in Fig. 4.2.3 (j)

Safety Factor:

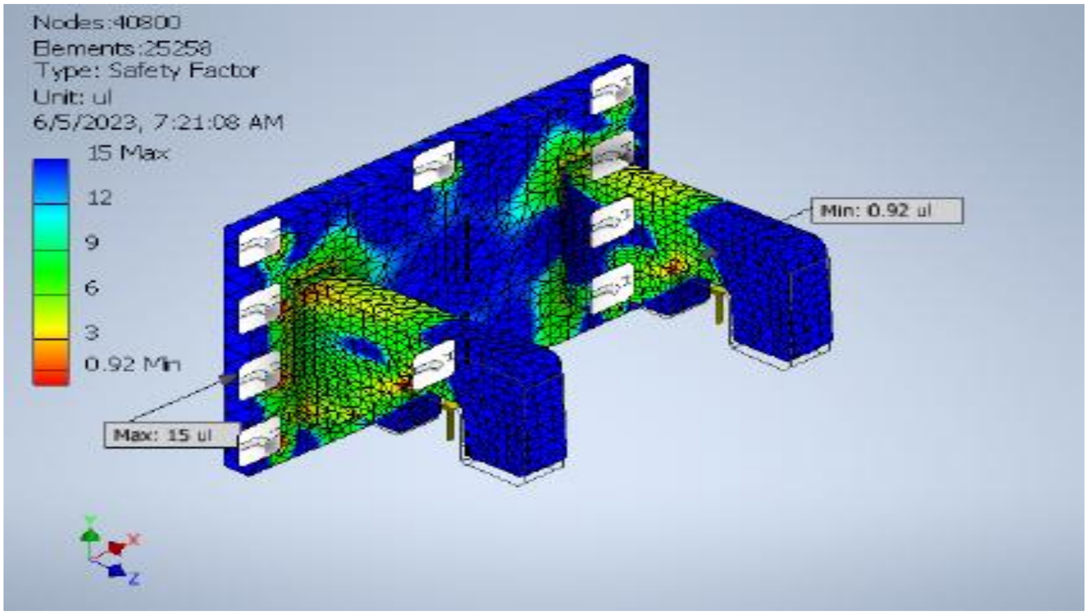

Fig. 4.2.3 (i) safety factor minimum of Nut Housing Holder

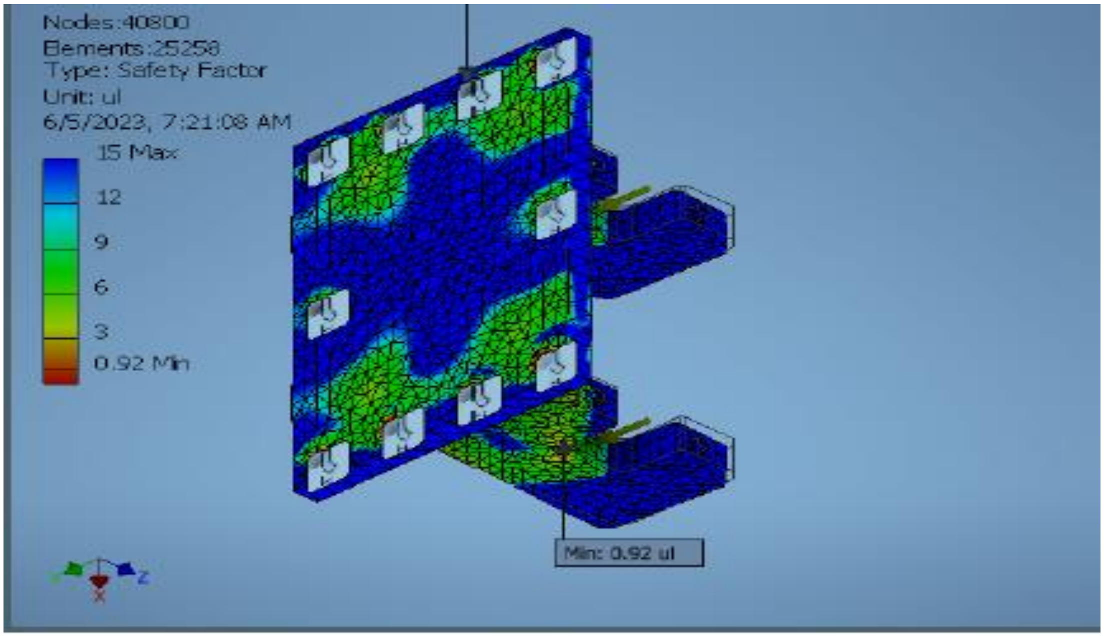

Fig. 4.2.3 (j) safety factor maximum of Nut Housing Holder

4.2.4 **Part Number**: M1071-01-08, Column Fabrication

Material : ABS Plastic, Mass Density- 1.06/cm^3, Yield Strength- 20MPa ,Ultimate Tensile Strength- 29.6 MPa, Young's Modulus-2.24 GPa, Poisson's Ratio- 0.38 ul, Shear Modulus- 0.811594 GPa.The minimum von Mises stress for the Column Fabrication is simulated using Autodesk Inventor and is depicted in Fig. 4.2.4(a), while the maximum von Mises stress is represented in Fig. 4.2.4(b).

Von Mises Stress:

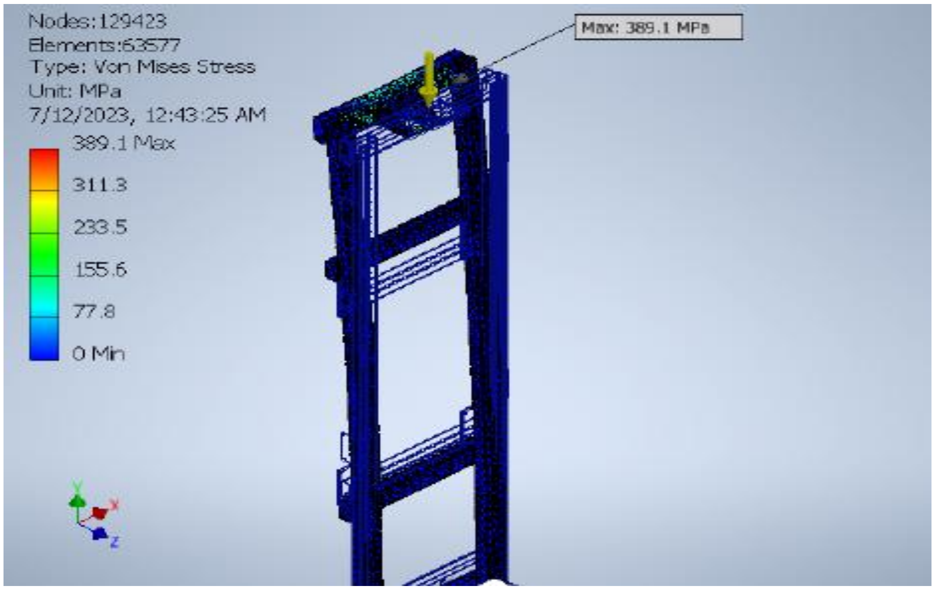

Fig. 4.2.4(a) Von Mises Stress minimum of Column Fabrication

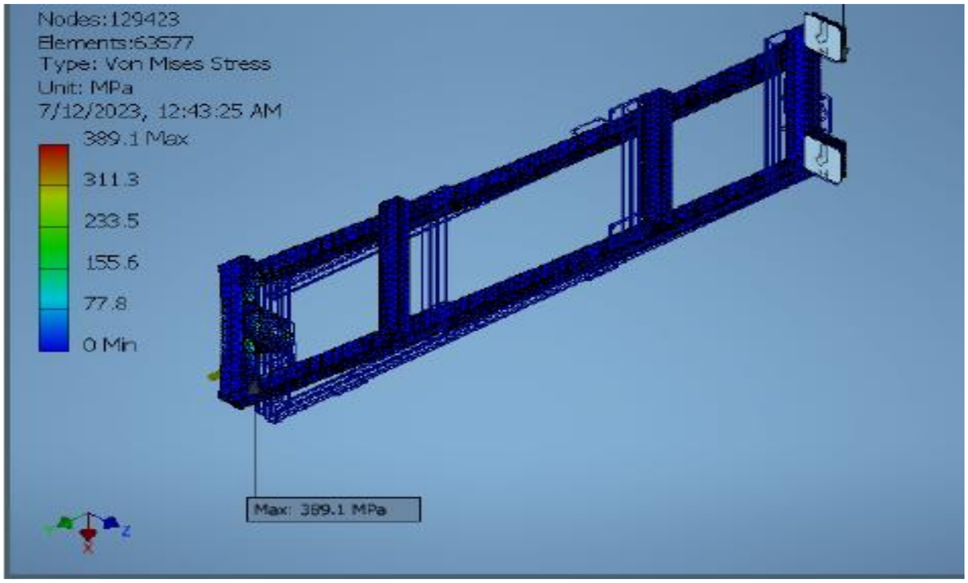

Fig. 4.2.4(b) Von Mises Stress maximum of Column Fabrication

The minimum 1St Principle Stress for the Column Fabrication is simulated using Autodesk Inventor and is depicted in Fig. 4.2.4(c), while the maximum 1St Principle Stress is represented in Fig. 4.2.4(d). and the minimum 3rd Principle Stress for the Column Fabrication is simulated using Autodesk Inventor and is depicted in Fig. 4.2.4(e), while the maximum 3rdPrinciple Stress is represented in Fig. 4.2.4(f).

<u>1StPrinciple Stress:</u>

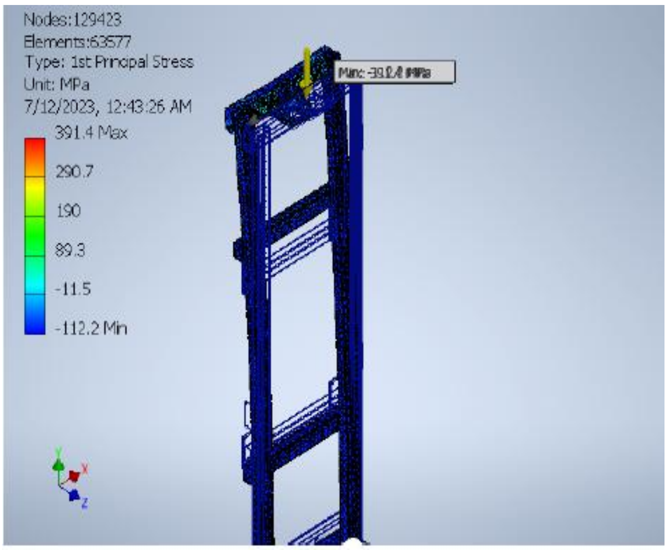

Fig. 4.2.4(c) 1St Principle Stress minimum of Column Fabrication

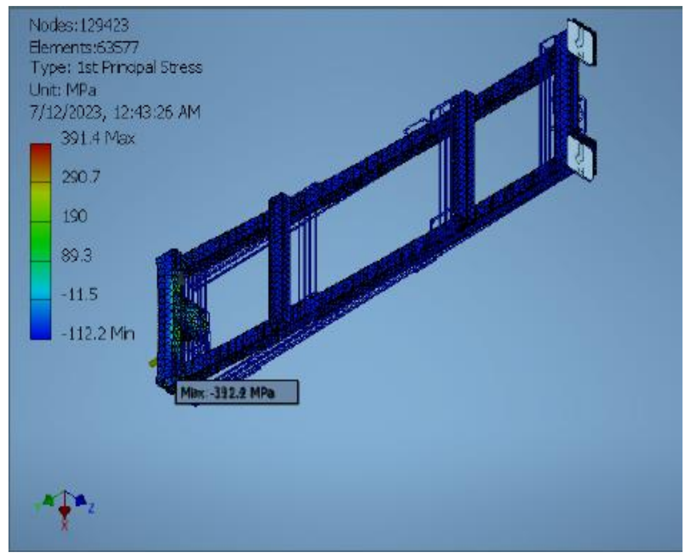

ig. 4.2.4(c) 1St Principle Stress minimum of Column Fabrication

<u>3rd Principle Stress:</u>

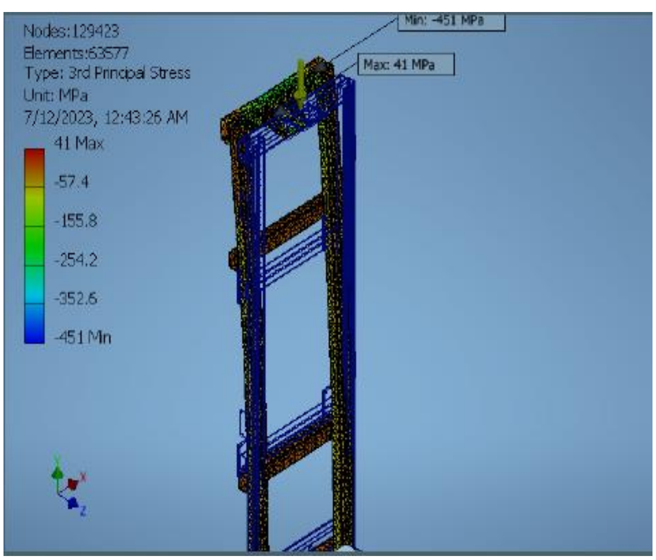

Fig. 4.2.4(d) 3rd Principle Stress minimum of Column Fabrication

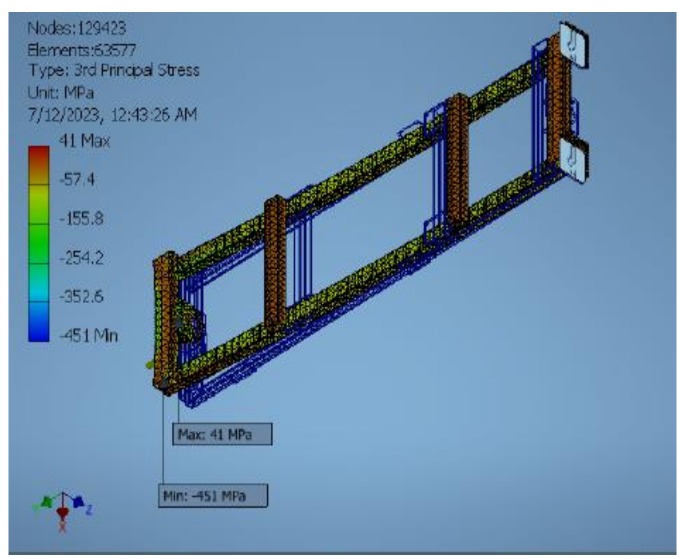

Fig. 4.2.4(e) 3rd Principle Stress minimum of Column Fabrication

The minimum displacement for the Column Fabrication is simulated using Autodesk Inventor and is depicted in Fig. 4.2.4(g), while the maximum Displacement is represented in Fig. 4.2.4(h)

Displacement:

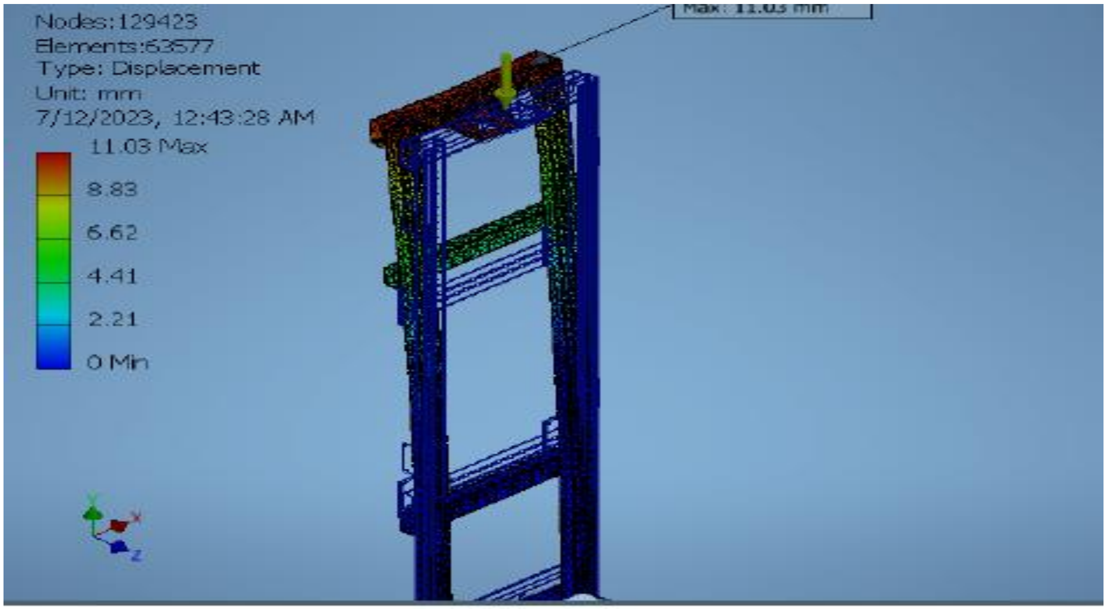

Fig. 4.2.4(g) displacement minimum of Column Fabrication

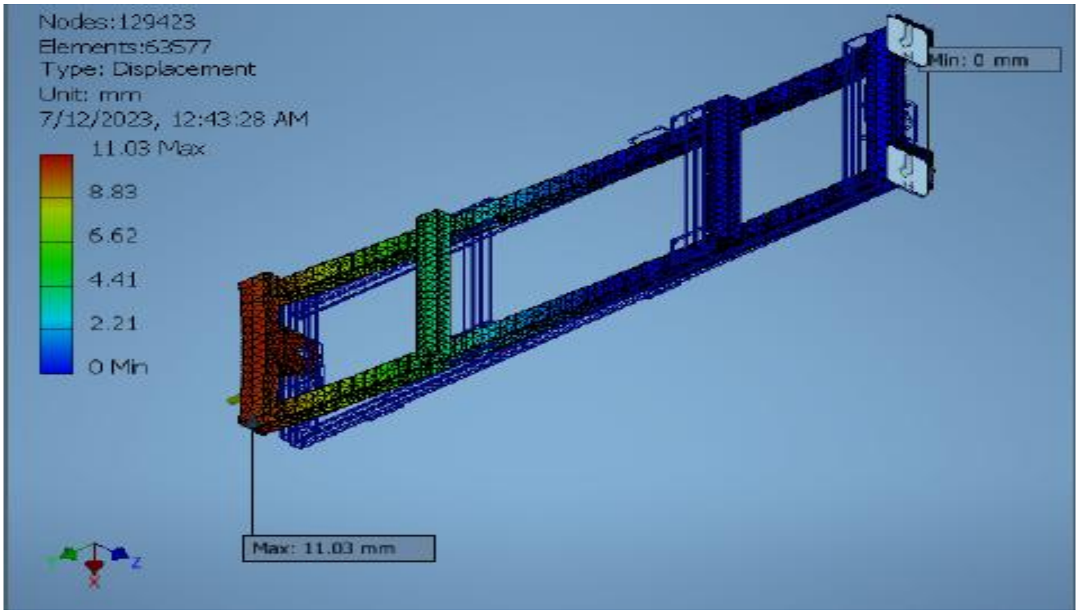

Fig. 4.2.4(h) displacement maximum ofColumn Fabrication

The minimum Safety Factor for the Column Fabrication is simulated using Autodesk Inventor and is depicted in Fig. 4.2.4(i), while the maximum Safety Factor is represented in Fig. 4.2.4(j)

<u>Safety Factor:</u>

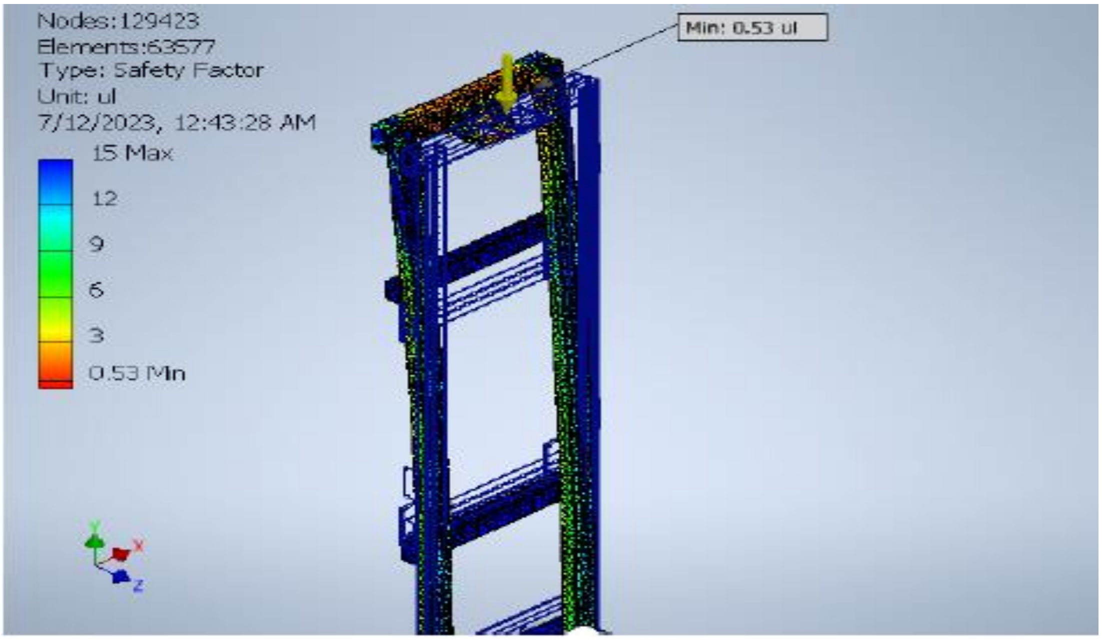

Fig. 4.2.4(i) safety factor minimum of Column Fabrication

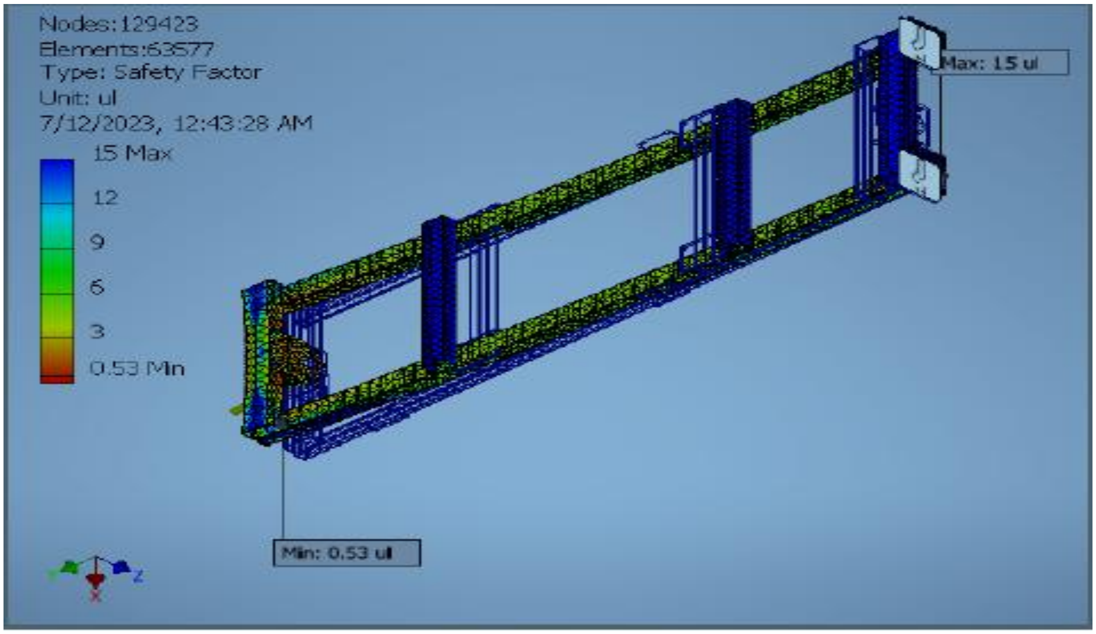

Fig. 4.2.4(j) safety factor maximum of Column Fabrication

4.2.5 **Part Number**: M1071-01-09, Column Joiner

Material : Mild Steel , Mass Density- 7.85g/cm^3, Yield Strength- 207 MPa ,Ultimate Tensile Strength- 345 MPa, Young's Modulus-220 GPa, Poisson's Ratio- 0.275 ul, Shear Modulus- 86.2745 GPa.The minimum von Mises stress for the Column Joiner is simulated using Autodesk Inventor and is depicted in Fig. 4.2.5(a), while the maximum von Mises stress is represented in Fig. 4.2.5(b).

Von Mises Stress:

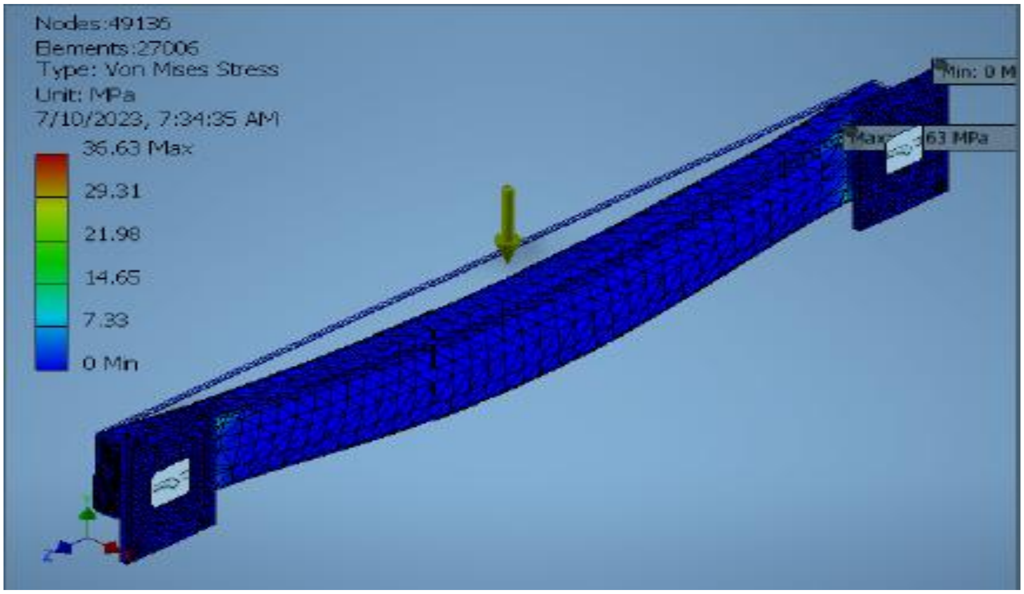

Fig. 4.2.5(a) Von Mises Stress minimum of Column Joiner

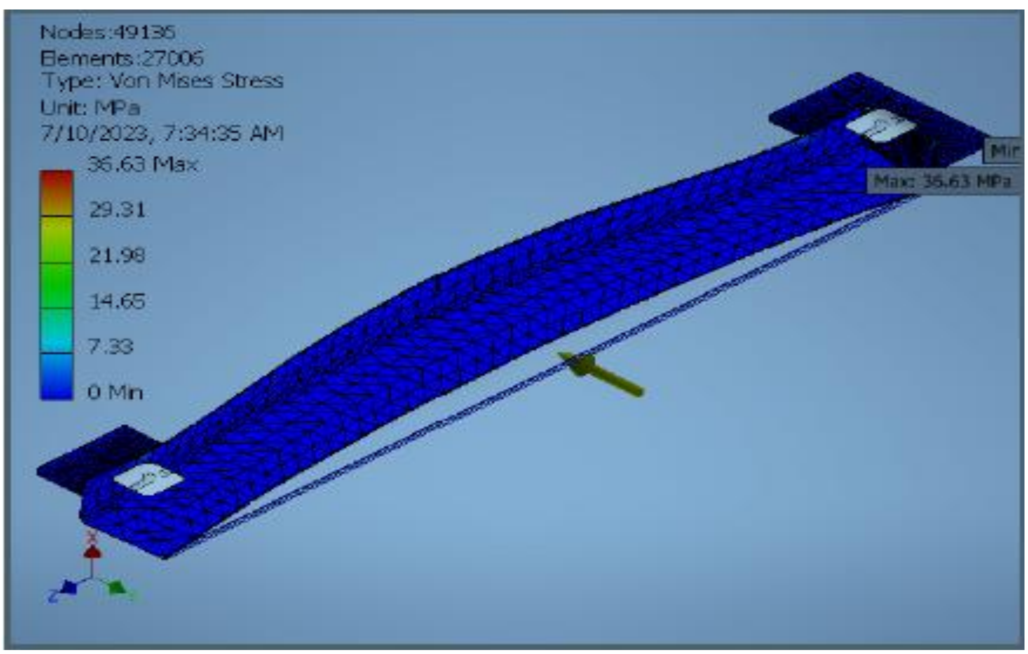

Fig. 4.2.5(b) Von Mises Stress maximum of Column Joiner

The minimum 1^{St} Principle Stress for the Column Joiner is simulated using Autodesk Inventor and is depicted in Fig. 4.2.5(c), while the maximum 1^{St} Principle Stress is represented in Fig. 4.2.5(d). and the minimum 3^{rd} Principle Stress for the Column Joiner is simulated using Autodesk Inventor and is depicted in Fig. 4.2.5(e), while the maximum 3rdPrinciple Stress is represented in Fig. 4.2.5(f).

1^{St}Principle Stress:

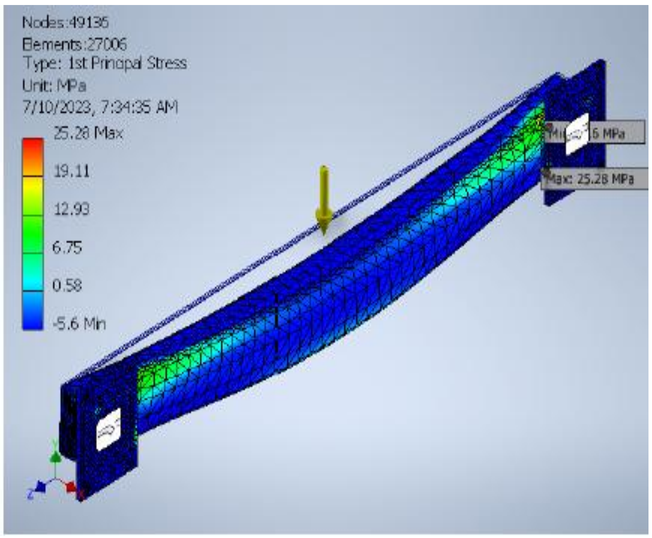

Fig. 4.2.5(c) 1St Principle Stress minimum of Column Joiner

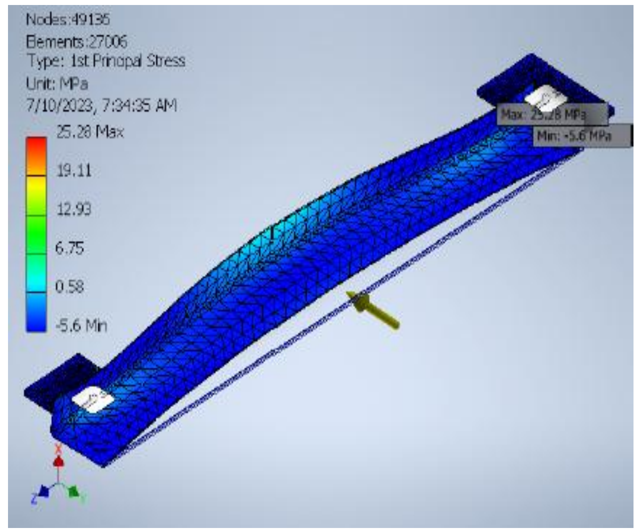

Fig. 4.2.5(d) 1St Principle Stress maximum of Column Joiner

3^{rd} Principle Stress:

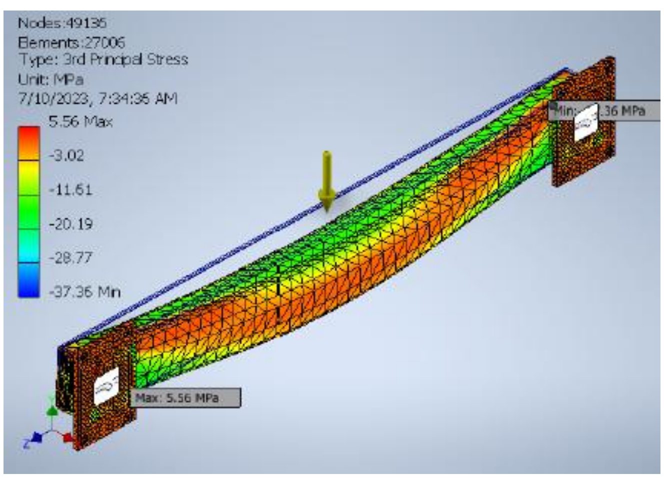

Fig. 4.2.5(e) 3rd Principle Stress minimum of Column Joiner

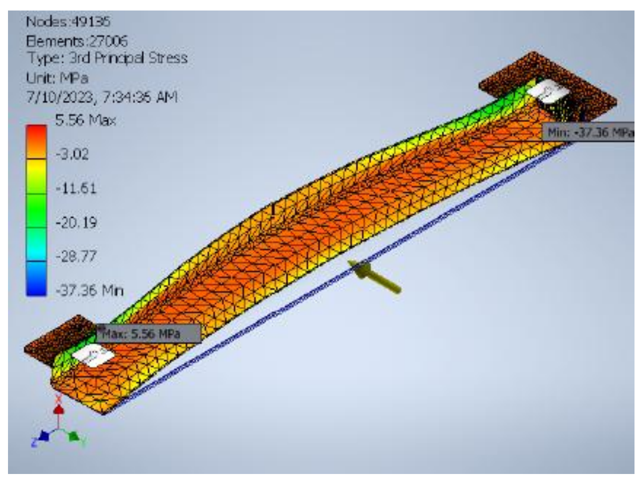

Fig. 4.2.5(f) 3rd Principle Stress maximum of Column Joiner

The minimum displacementfor the Column Joiner is simulated using Autodesk Inventor and is depicted in Fig. 4.2.5(g), while the maximum Displacementis represented in Fig. 4.2.5(h)

Displacement:

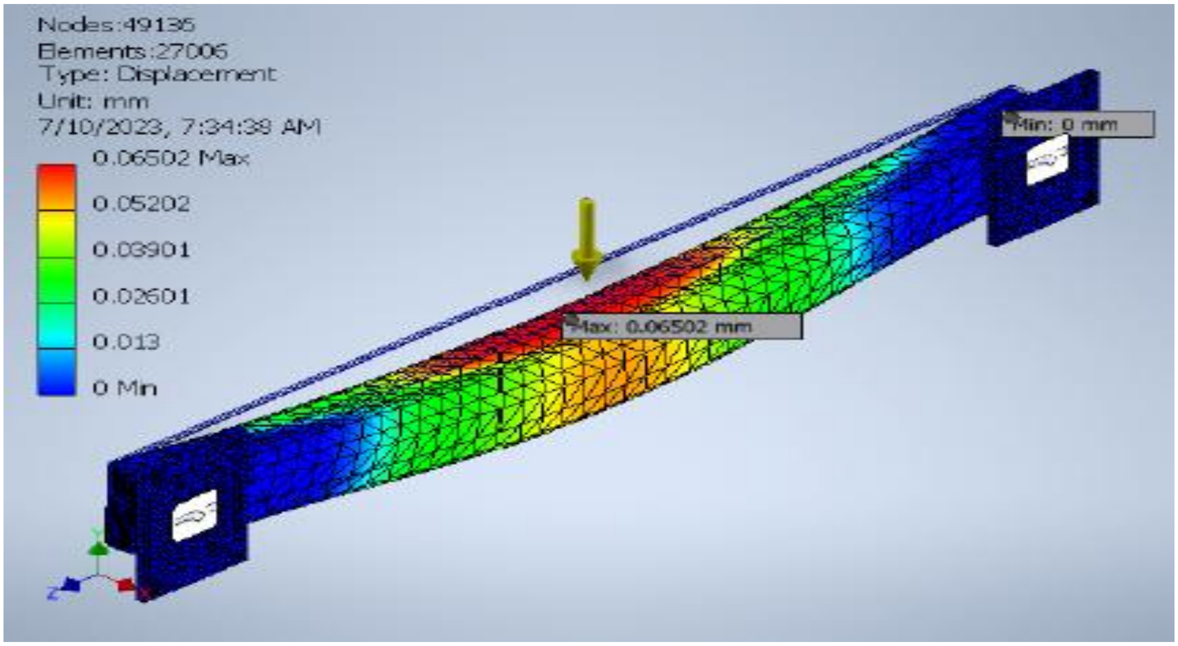

Fig. 4.2.5(g) displacement minimum of Column Joiner

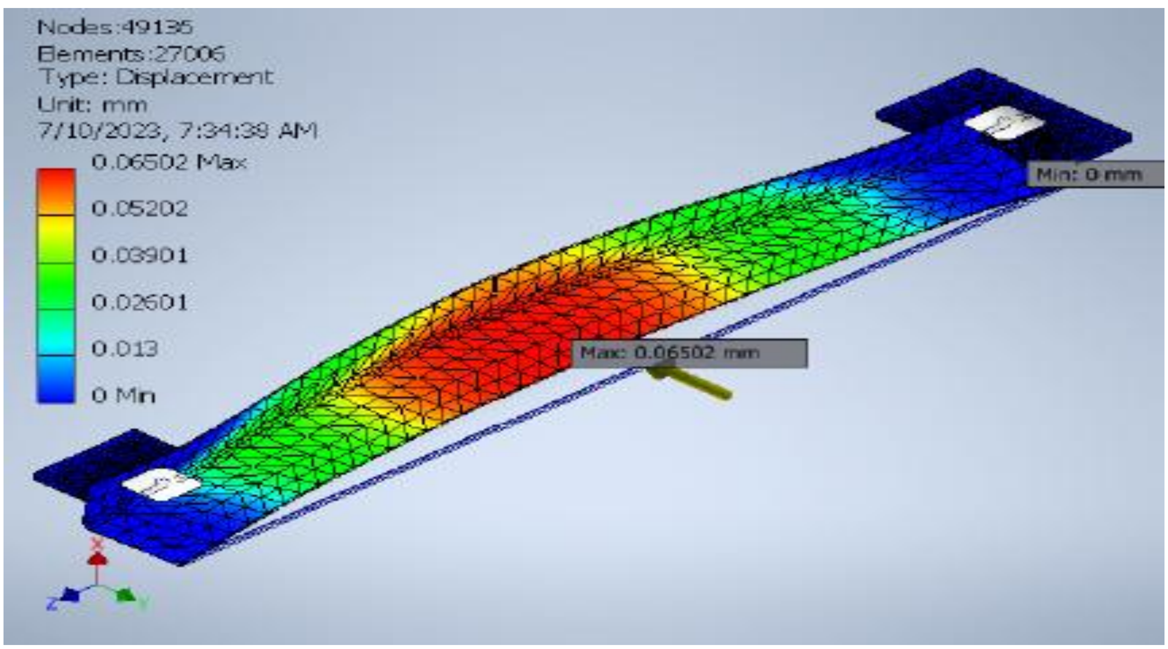

Fig. 4.2.5(h) displacement maximum of Column Joiner

The minimum Safety Factor for the Column Joiner is simulated using Autodesk Inventor and is depicted in Fig. 4.2.5(i), while the maximum Safety Factor is represented in Fig. 4.2.5(j)

Safety Factor:

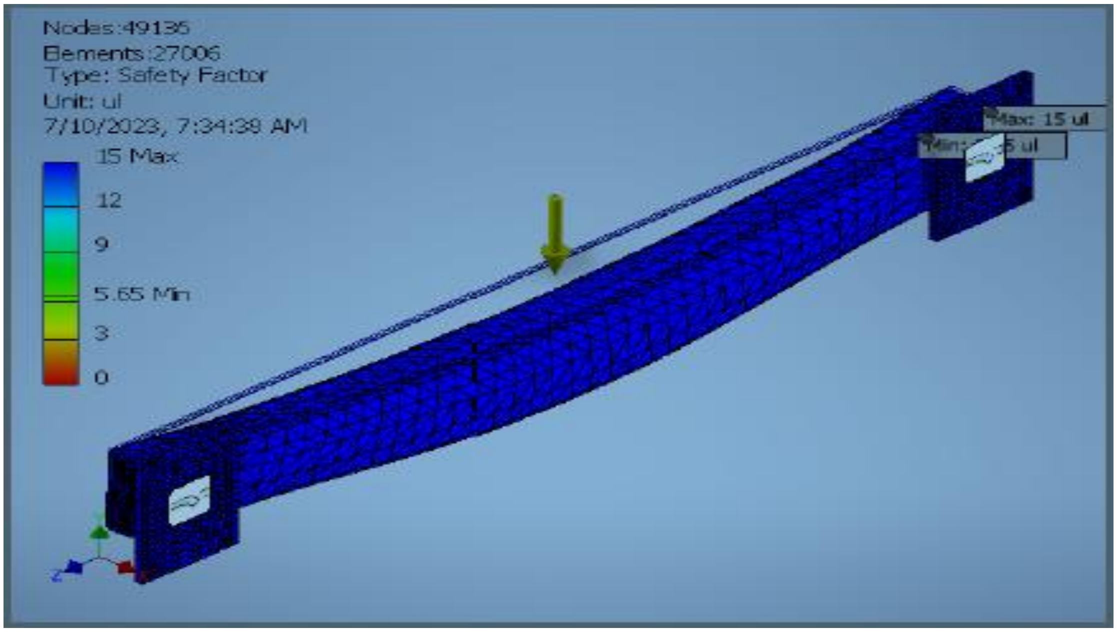

Fig. 4.2.5(i) safety factor minimum of Column Joiner

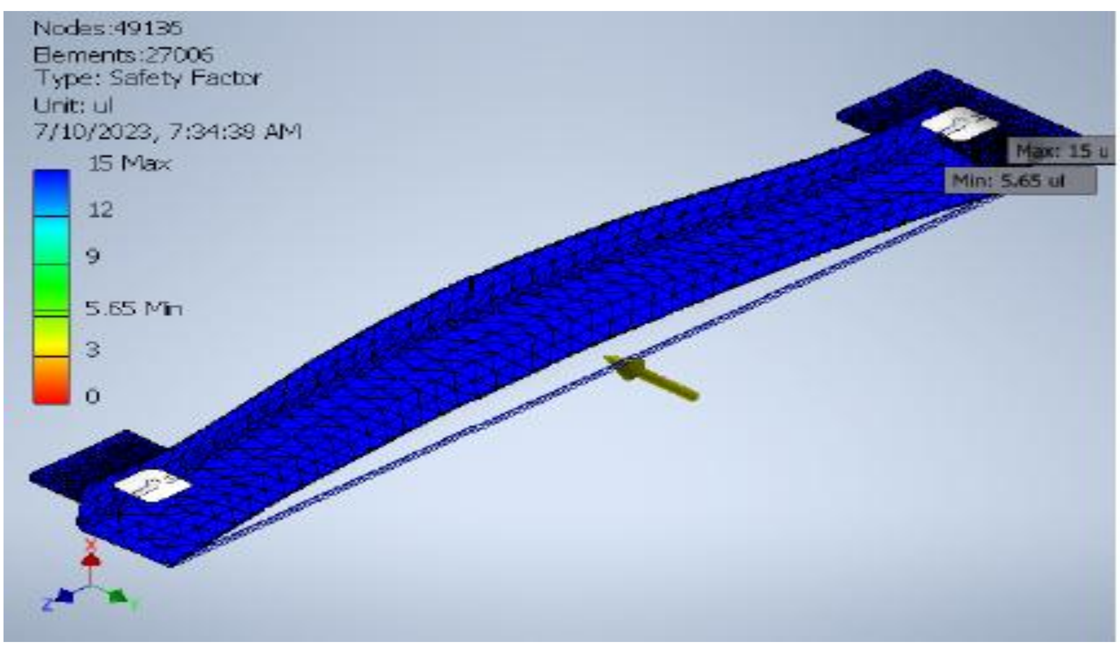

Fig. 4.2.5(j) safety factor maximum of Column Joiner

4.2.6 **Part Number**: M1071-01-11, Carriage Fabrication

Material : Mild Steel, Mass Density- 7.85g/cm^3, Yield Strength- 207 MPa ,Ultimate Tensile Strength- 345 MPa, Young's Modulus-220 GPa, Poisson's Ratio- 0.275 ul, Shear Modulus- 86.2745 GPa.The minimum von Mises stress for the Carriage Fabrication is simulated using Autodesk Inventor and is depicted in Fig. 4.2.6(a), while the maximum von Mises stress is represented in Fig. 4.2.6(b).

Von Mises Stress:

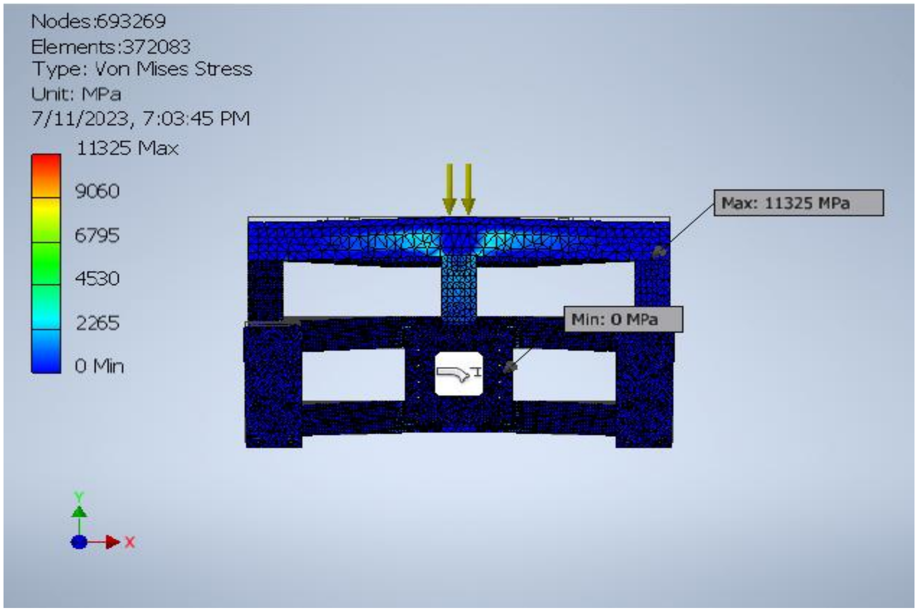

Fig. 4.2.6(a) Von Mises Stress minimum of Carriage Fabrication

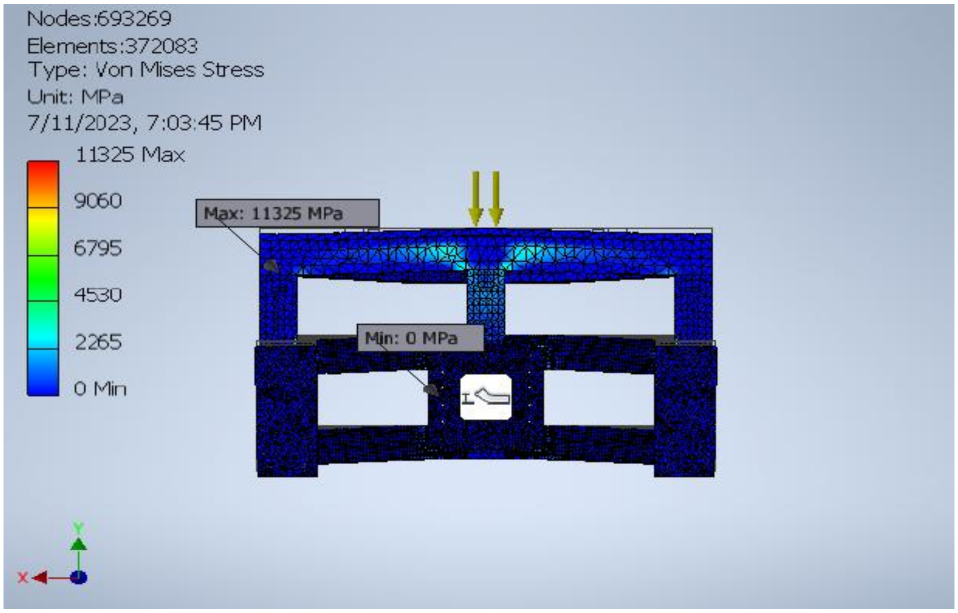

Fig. 4.2.6(b) Von Mises Stress maximum of Carriage Fabrication

The minimum 1St Principle Stress for the Carriage Fabrication is simulated using Autodesk Inventor and is depicted in Fig. 4.2.6(c), while the maximum 1St Principle Stress is represented in Fig. 4.2.6(d). and the minimum 3rd Principle Stress for the Carriage Fabrication is simulated using Autodesk Inventor and is depicted in Fig. 4.2.6(e), while the maximum 3rdPrinciple Stress is represented in Fig. 4.2.6(f).

1StPrinciple Stress:

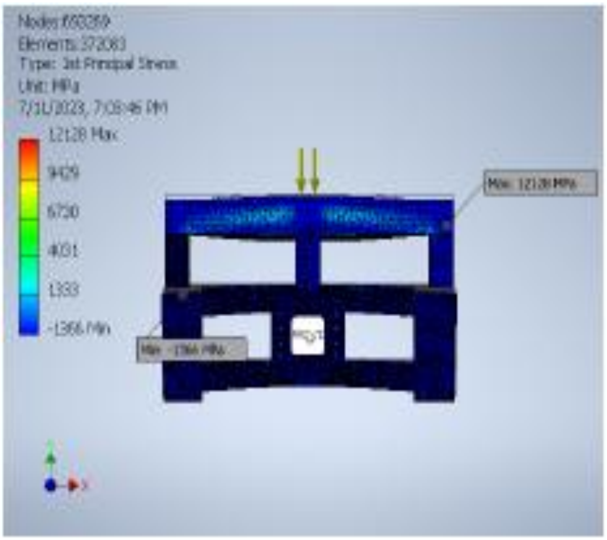

Fig. 4.2.6 (c) 1St Principle Stress minimum of Carriage

Fig. 4.2.6 (d) 1St Principle Stress maximum of Carriage

3rd Principle Stress:

Fig. 4.2.6 (e) 3rd Principle Stress minimum of Carriage

Fig. 4.2.6 (f) 3rd Principle Stress maximum of Carriage

The minimum displacement for the Carriage Fabrication is simulated using Autodesk Inventor and is depicted in Fig. 4.2.6(g), while the maximum Displacement is represented in Fig. 4.2.6(h)

Displacement:

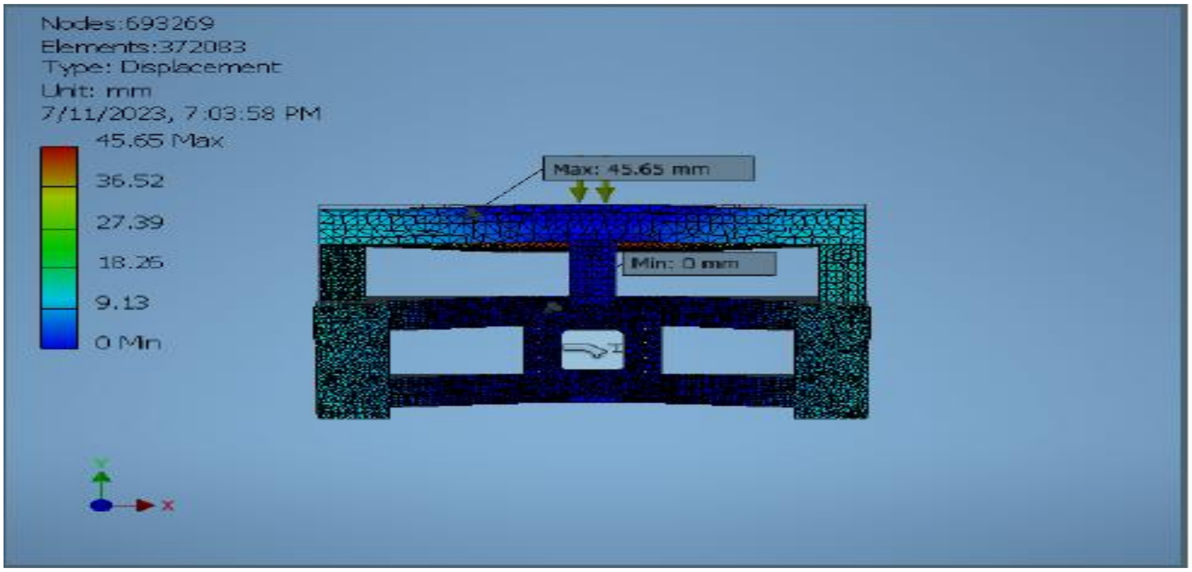

Fig. 4.2.6 (g) displacement minimum of Carriage Fabrication

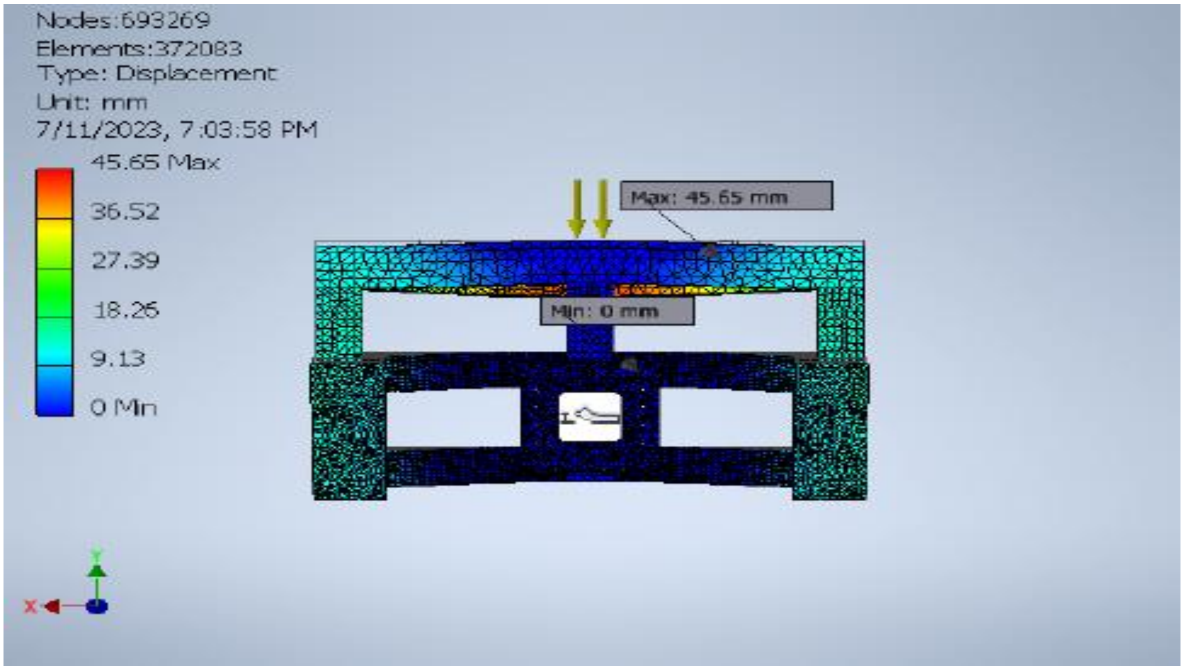

Fig. 4.2.6(h) displacement maximum of Carriage Fabrication

The minimum Safety Factor for the Carriage Fabrication is simulated using Autodesk Inventor and is depicted in Fig. 4.2.6(i), while the maximum Safety Factor is represented in Fig. 4.2.6(j)

<u>Safety Factor</u>

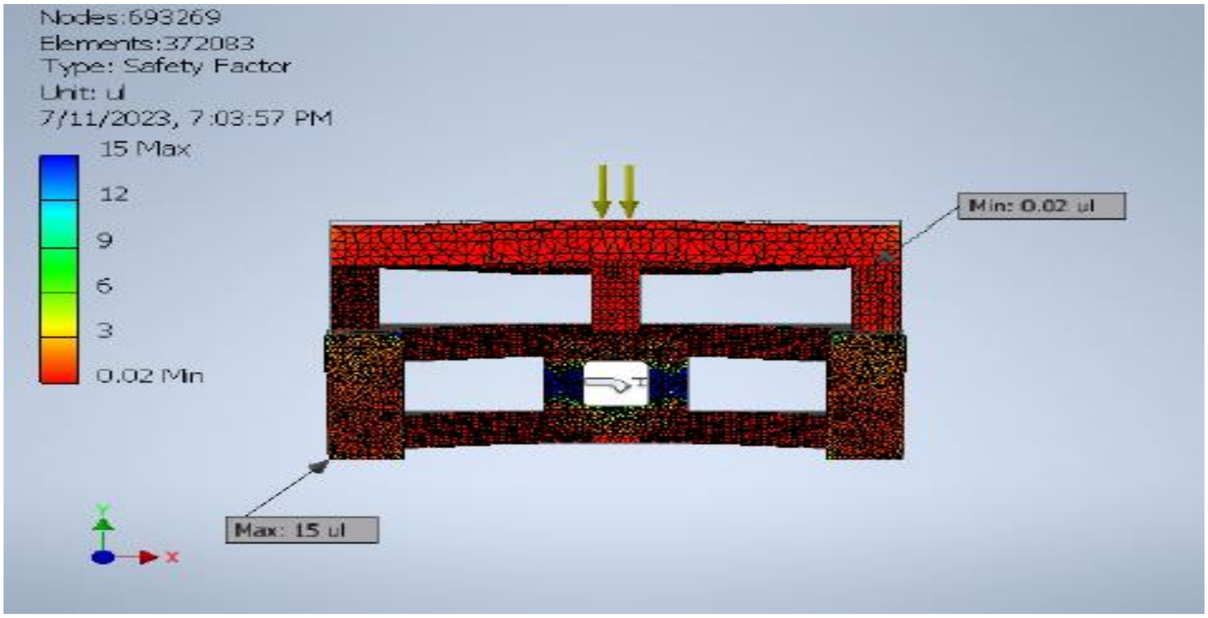

Fig. 4.2.6 (i) safety factor minimum of Carriage Fabrication

Fig. 4.2.6 (j) safety factor maximum of Carriage Fabrication

4.2.7 **Part Number**: M1071-02-01, Top Platform Fabrication

Material : Mild Steel, Mass Density- 7.85g/cm^3, Yield Strength- 207 MPa ,Ultimate Tensile Strength- 345 MPa, Young's Modulus-220 GPa, Poisson's Ratio- 0.275 ul, Shear Modulus- 86.2745 GPa.The minimum von Mises stress for the Top Platform Fabrication is simulated using Autodesk Inventor and is depicted in Fig. 4.2.7(a), while the maximum von Mises stress is represented in Fig. 4.2.7(b).

Von Mises Stress:

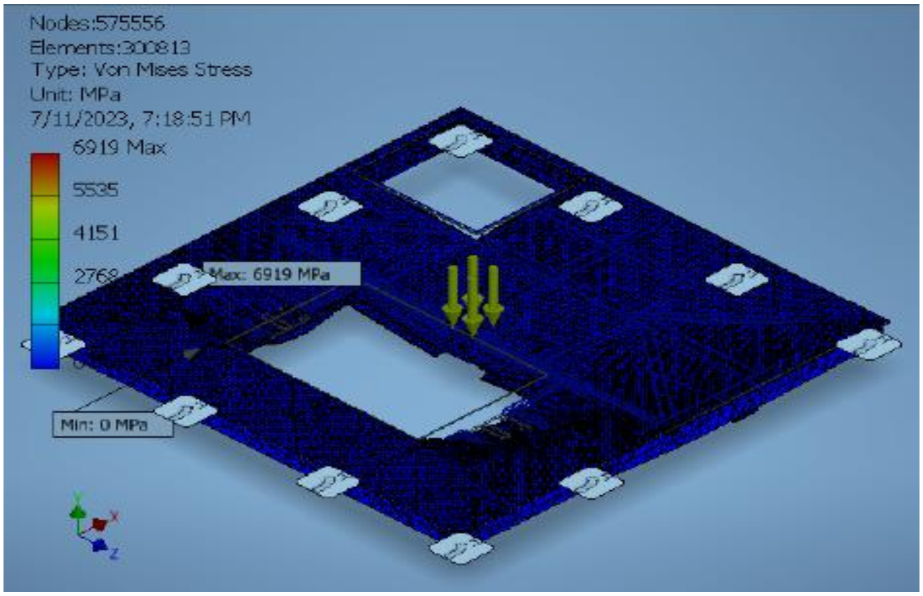

Fig. 4.2.7(a) Von Mises Stress minimum of Top Platform Fabrication

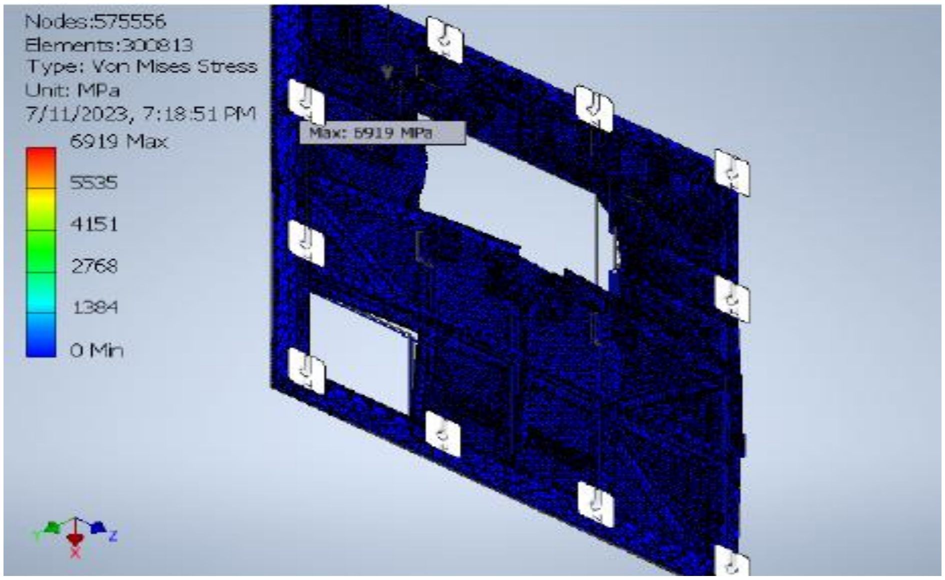

Fig. 4.2.7(b) Von Mises Stress maximum of Top Platform Fabrication

The minimum 1St Principle Stress for the top platform is simulated using Autodesk Inventor and is depicted in Fig. 4.2.6(c), while the maximum 1St Principle Stress is represented in Fig. 4.2.6(d). and the minimum 3rd Principle Stress for the Carriage Fabrication is simulated using Autodesk Inventor and is depicted in Fig. 4.2.6(e), while the maximum 3rdPrinciple Stress is represented in Fig. 4.2.6(f).

1StPrinciple Stress :

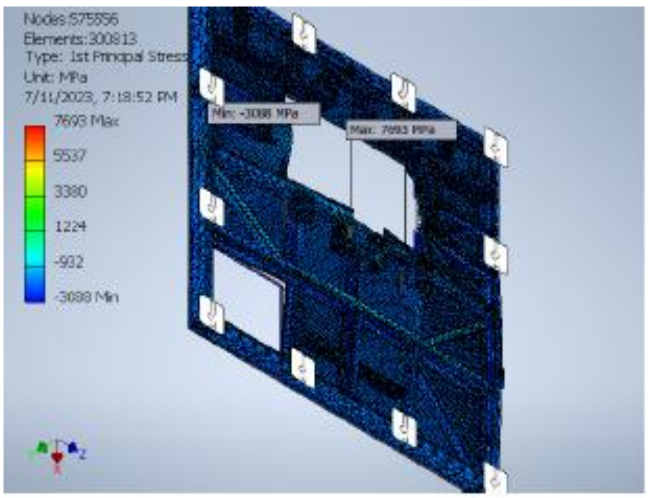

Fig. 4.2.7(c) 1S t Principle Stress minimum of Top Platform

Fig. 4.2.7(d) 1St Principle Stress maximum of Top Platform

3rd Principle Stress :

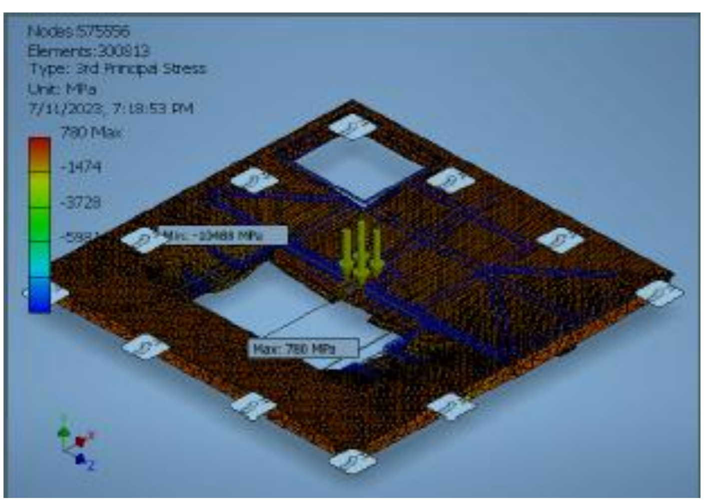

Fig. 4.2.7(e) 3rd Principle Stress minimum of Top Platform

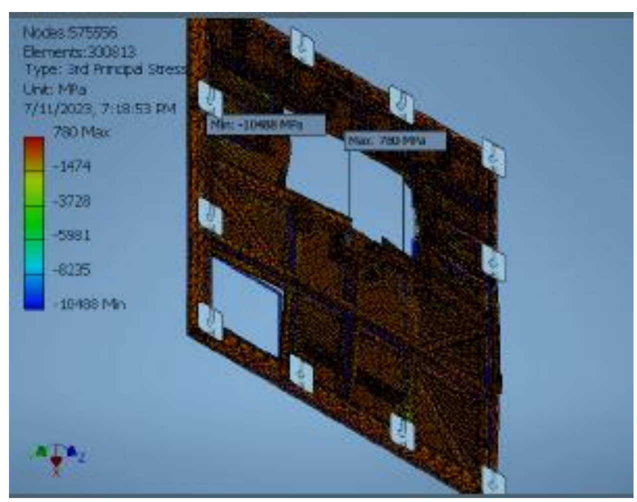

Fig. 4.2.7(f) 3rd Principle Stress maximum of Top Platform

The minimum displacement for the Top Platform Fabrication is simulated using Autodesk Inventor and is depicted in Fig. 4.2.7(g), while the maximum Displacement is represented in Fig. 4.2.7(h)

Displacement:

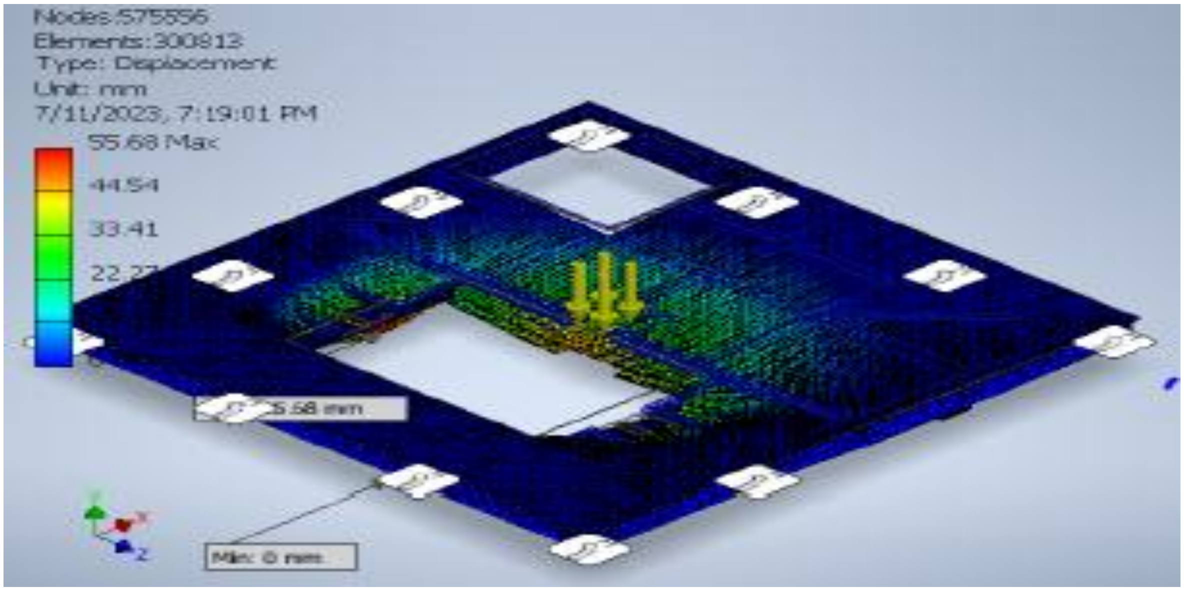

Fig. 4.2.7(g) displacement minimum of Top Platform Fabrication

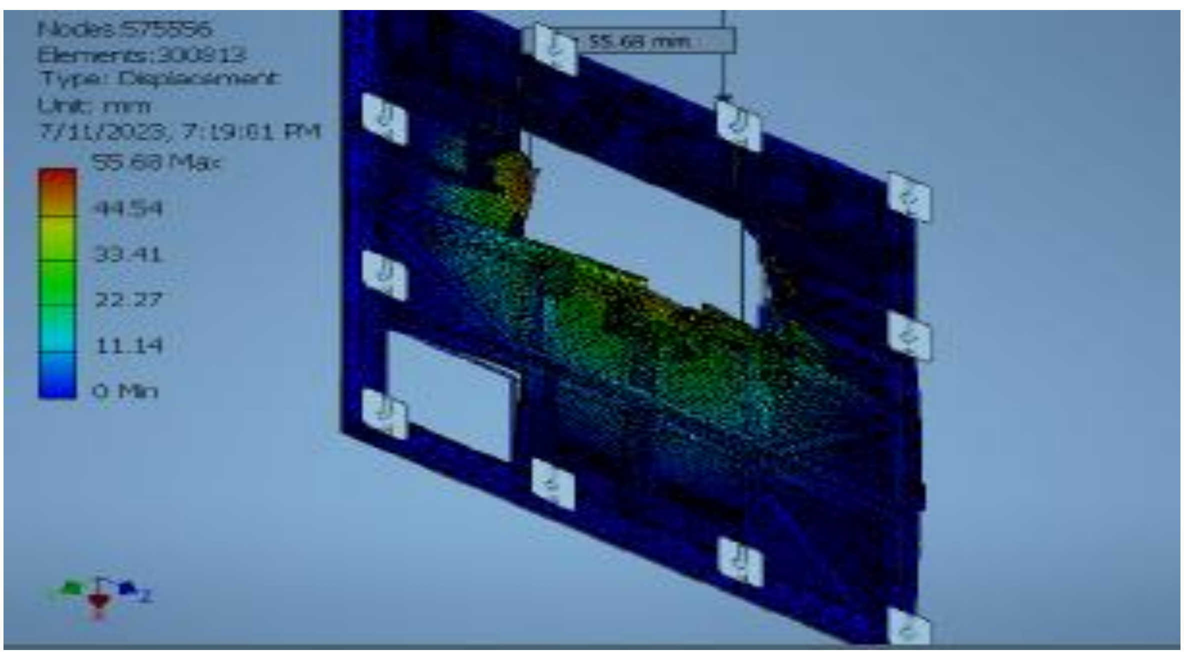

Fig. 4.2.7(h) displacement maximum of Top Platform Fabrication

The minimum Safety Factor for the Top Platform Fabrication is simulated using Autodesk Inventor and is depicted in Fig. 4.2.7(i), while the maximum Safety Factor is represented in Fig. 4.2.7(j)

Safety Factor

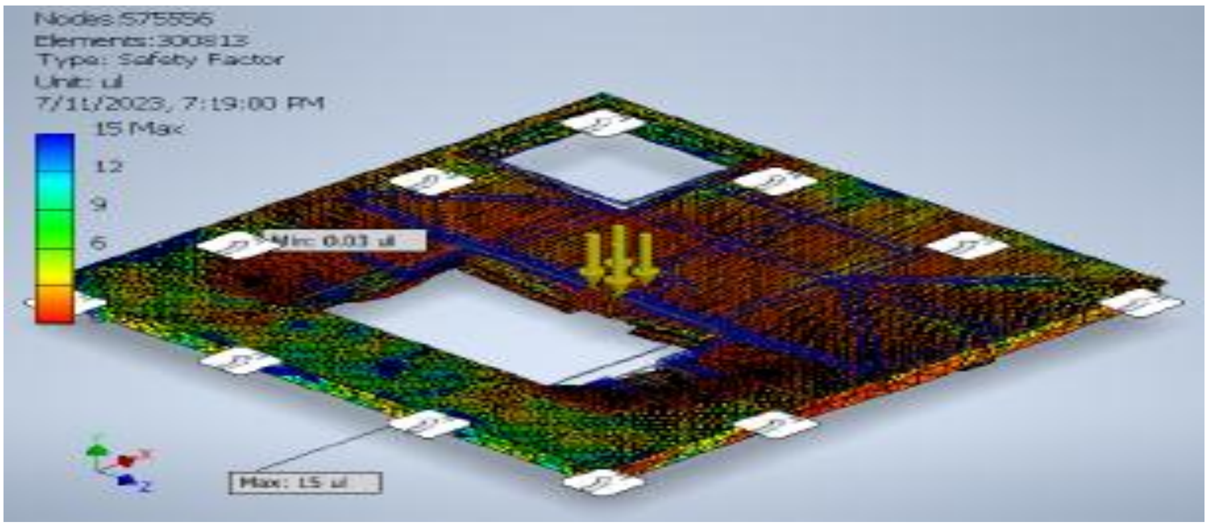

Fig. 4.2.7(i) safety factor minimum of Top Platform Fabrication

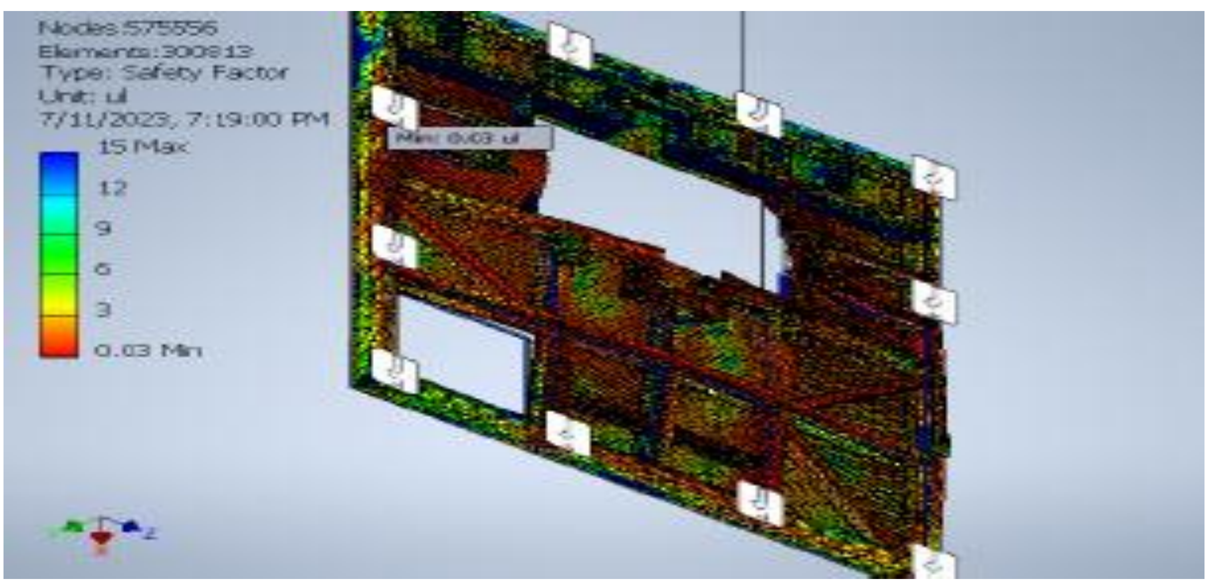

Fig. 4.2.7(j) safety factor maximum of Top Platform Fabrication

4.2.8 **Part Number**: M1071-02-02, SLP Platform Fab.

Material : Mild Steel, Mass Density- 7.85g/cm^3, Yield Strength- 207 MPa ,Ultimate Tensile Strength-345 MPa, Young's Modulus-220 GPa, Poisson's Ratio- 0.275 ul, Shear Modulus- 86.2745 GPa.The minimum von Mises stress for the SLP Platform Fab is simulated using Autodesk Inventor and is depicted in Fig. 4.2.8(a), while the maximum von Mises stress is represented in Fig. 4.2.8(b).

Von Mises Stress:

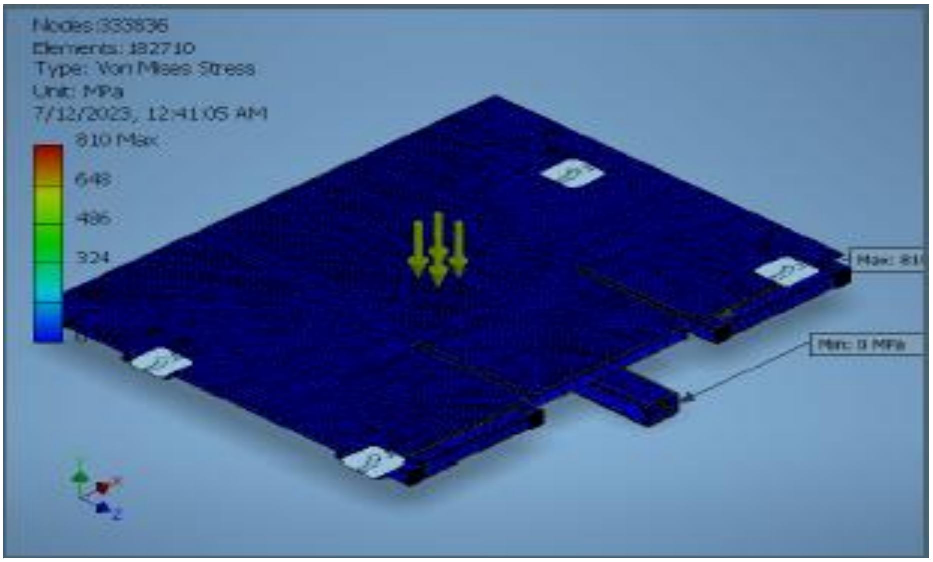

Fig. 4.2.8(a) Von Mises Stress minimum of SLP Platform Fab

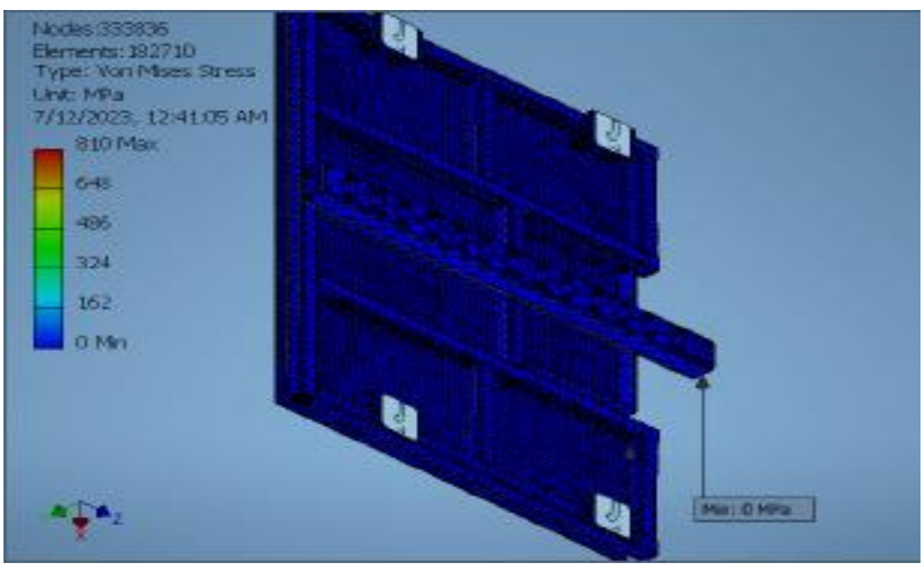

Fig. 4.2.8(b) Von Mises Stress maximum of SLP Platform Fab

The minimum 1St Principle Stress for the SLP Platform Fab. is simulated using Autodesk Inventor and is depicted in Fig. 4.2.8(c), while the maximum 1St Principle Stress is represented in Fig. 4.2.8(d). and the minimum 3rd Principle Stress for the SLP Platform Fab. is simulated using Autodesk Inventor and is depicted in Fig. 4.2.8(e), while the maximum 3rdPrinciple Stress is represented in Fig. 4.2.8(f).

<u>1StPrinciple Stress:</u>

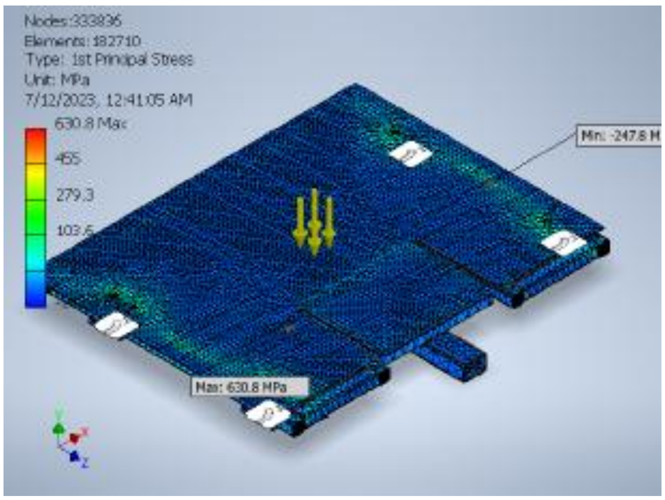

Fig. 4.2.8(c) 1St Principle Stress minimum of SLP Platform

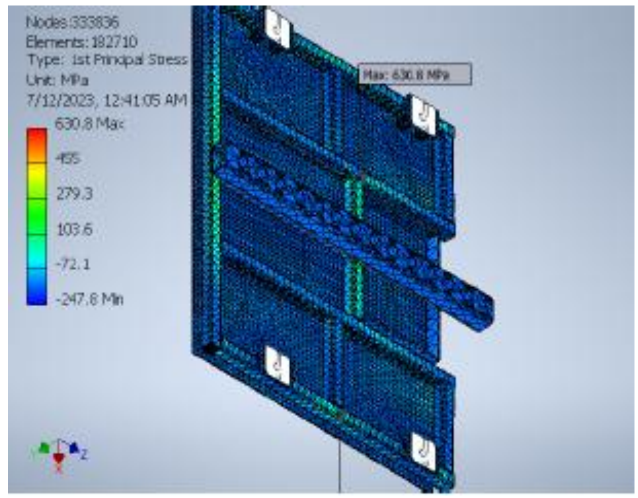

Fig. 4.2.8(d) 1St Principle Stress maximum of SLP Platform

<u>3rdPrinciple Stress:</u>

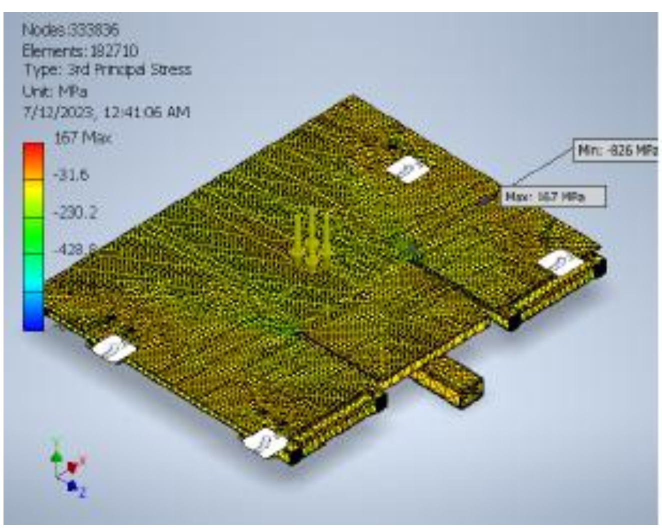

Fig. 4.2.8(e) 3rd Principle Stress minimum of SLP Platform

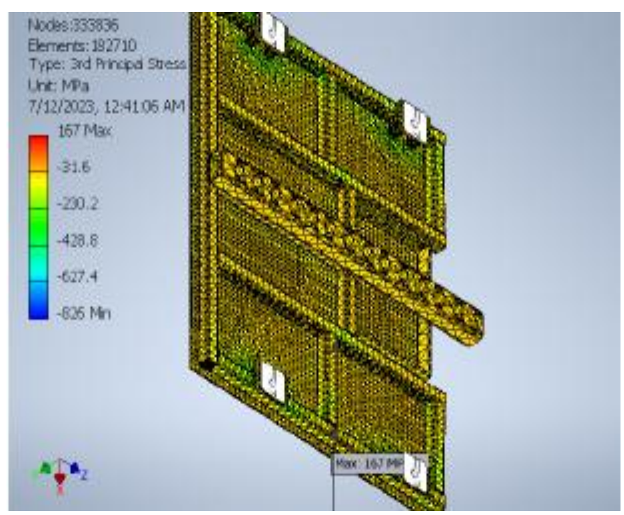

Fig. 4.2.8(f) 3rd Principle Stress maximum of SLP Platform

The minimum displacementfor the SLP Platform Fab is simulated using Autodesk Inventor and is depicted in Fig. 4.2.8(g), while the maximum Displacementis represented in Fig. 4.2.8(h)

Displacement:

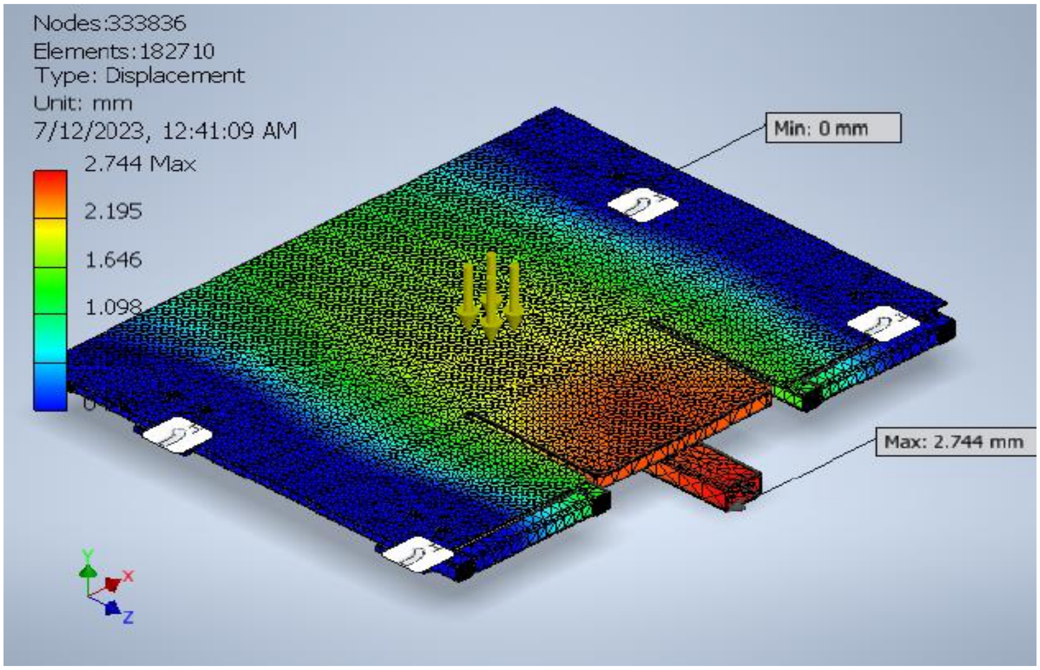

Fig. 4.2.8(g) displacement minimum of SLP Platform Fab

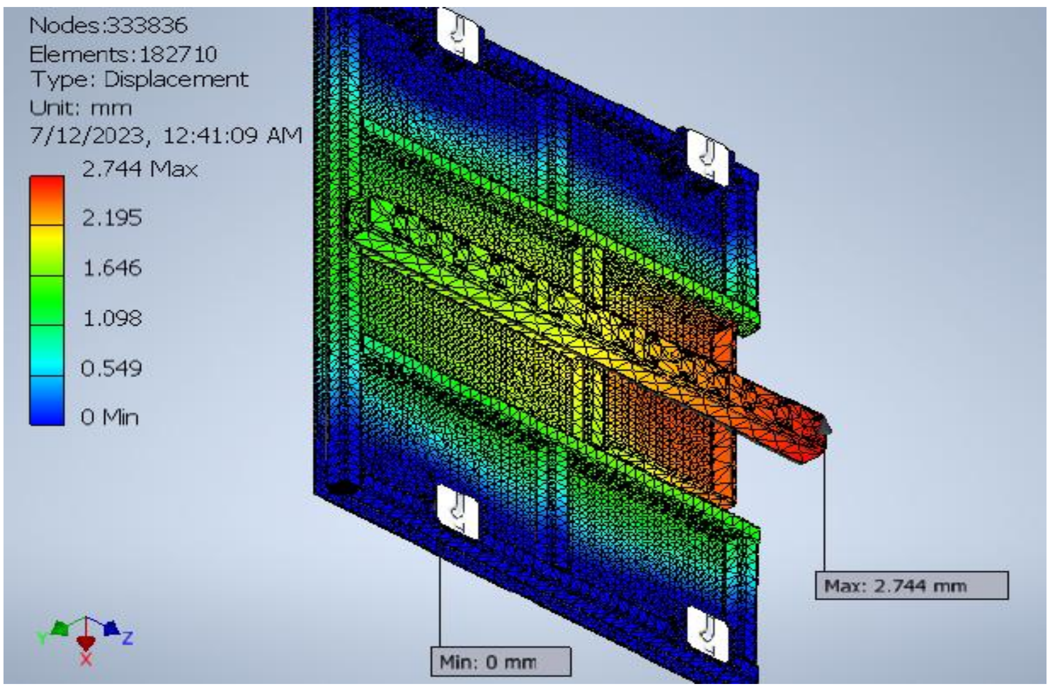

Fig. 4.2.8(h) displacement maximum of SLP Platform Fab

The minimum Safety Factor for the SLP Platform Fab is simulated using Autodesk Inventor and is depicted in Fig. 4.2.8(i), while the maximum Safety Factor is represented in Fig. 4.2.8(j)

Safety Factor

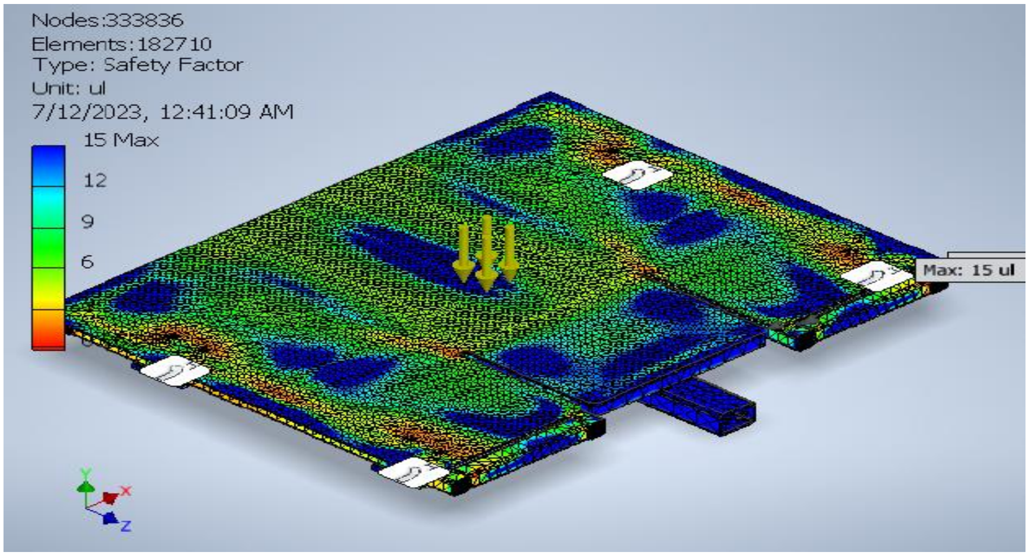

Fig. 4.2.8(i) safety factor minimum of SLP Platform Fab

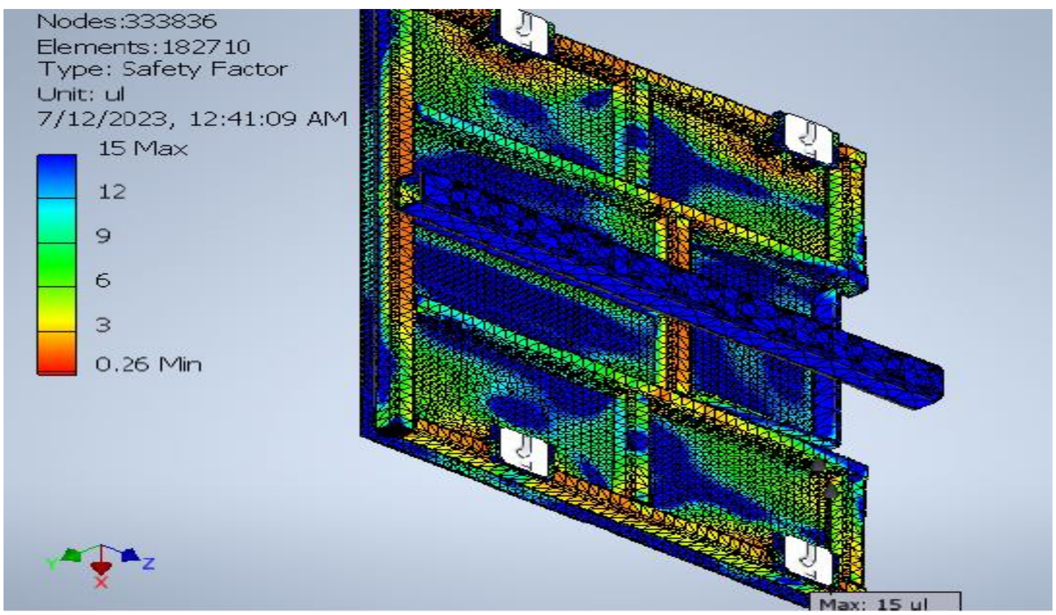

Fig. 4.2.8(j) safety factor maximum of SLP Platform Fab

4.2.9 **<u>Part Number</u>**: M1071-02-03, Block Mounting Bracket

<u>Material</u> : Mild Steel, Mass Density- 7.85g/cm^3, Yield Strength- 207 MPa ,Ultimate Tensile Strength- 345 MPa, Young's Modulus-220 GPa, Poisson's Ratio- 0.275 ul, Shear Modulus- 86.2745 GPa.The minimum von Mises stress for the Block Mounting Bracket is simulated using Autodesk Inventor and is depicted in Fig. 4.2.9(a), while the maximum von Mises stress is represented in Fig. 4.2.9(b).

<u>Von Mises Stress:</u>

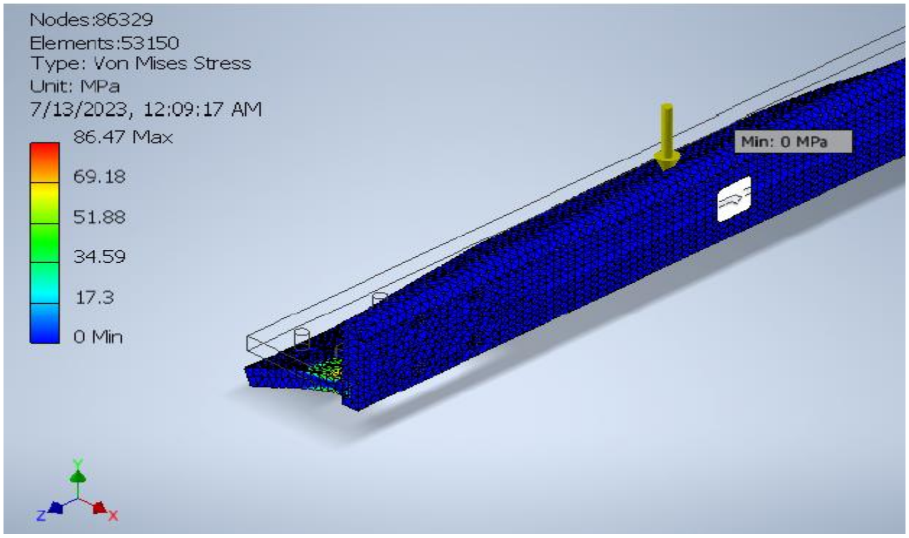

Fig. 4.2.9(a) Von Mises Stress minimum of Block Mounting Bracket

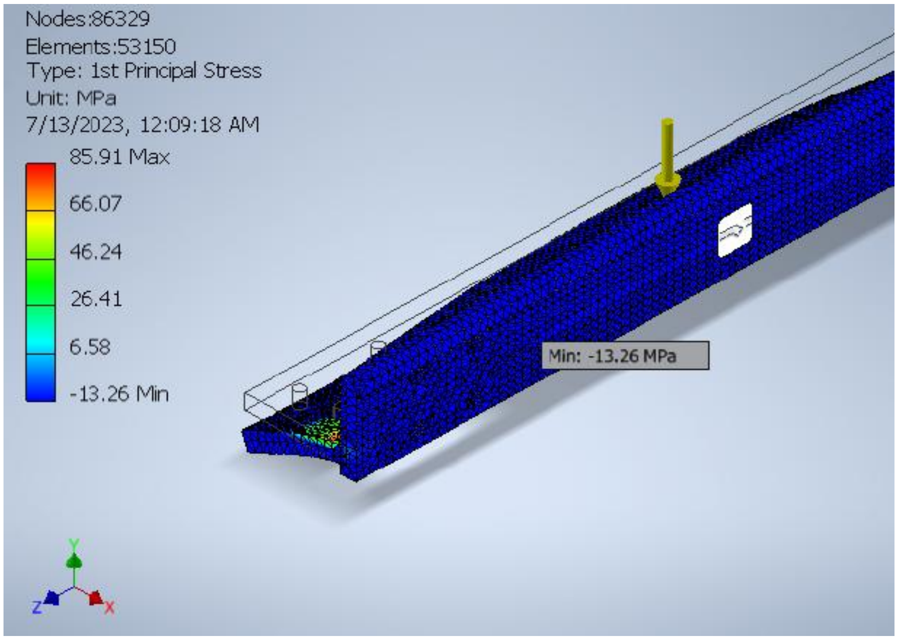

Fig. 4.2.9(b) Von Mises Stress maximum of Block Mounting Bracket

The minimum 1^{St} Principle Stress for the Block Mounting Bracket is simulated using Autodesk Inventor and is depicted in Fig. 4.2.9(c), while the maximum 1^{St} Principle Stress is represented in Fig. 4.2.9(d). and the minimum 3^{rd} Principle Stress for the Block Mounting Bracket is simulated using Autodesk Inventor and is depicted in Fig. 4.2.9(e), while the maximum 3rdPrinciple Stress is represented in Fig. 4.2.9(f).

1^{St}Principle Stress:

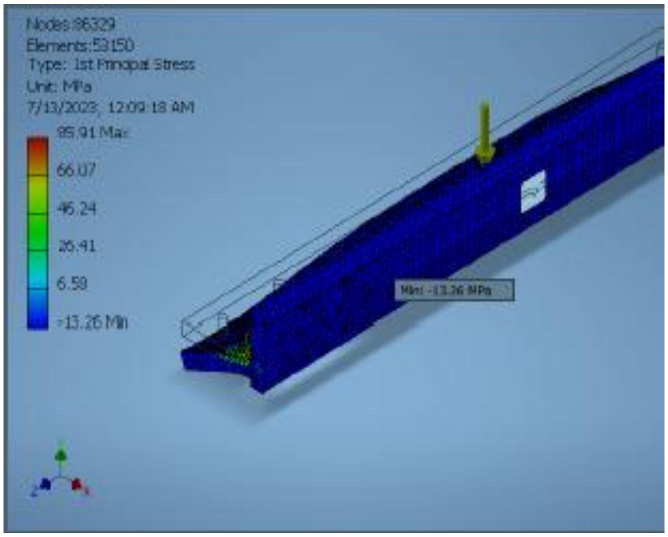

Fig. 4.2.9(c) 1St Principle Stress minimum of Block

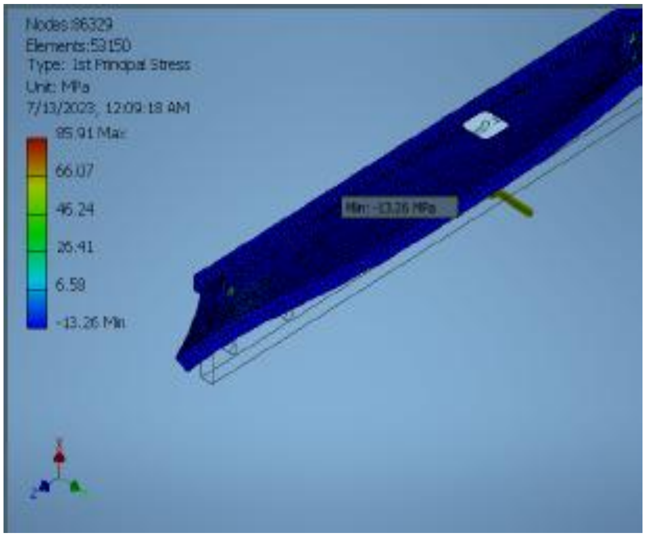

Fig. 4.2.9(d) 1St Principle Stress maximum of Block

3^{rd} Principle Stress:

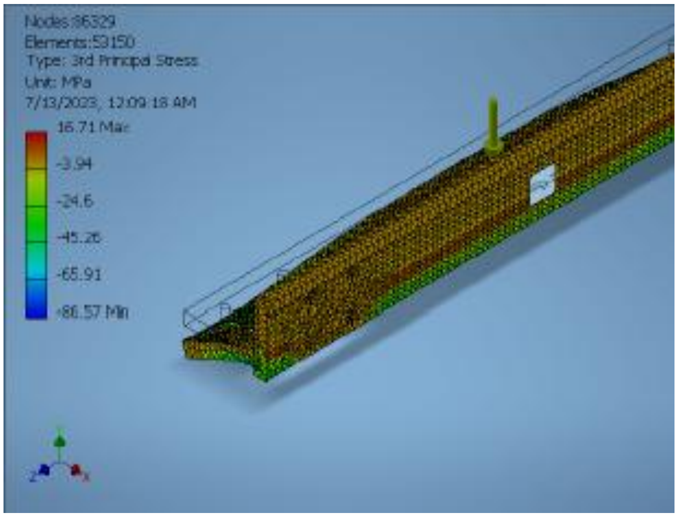

Fig. 4.2.9(e) 3rd Principle Stress minimum of Block

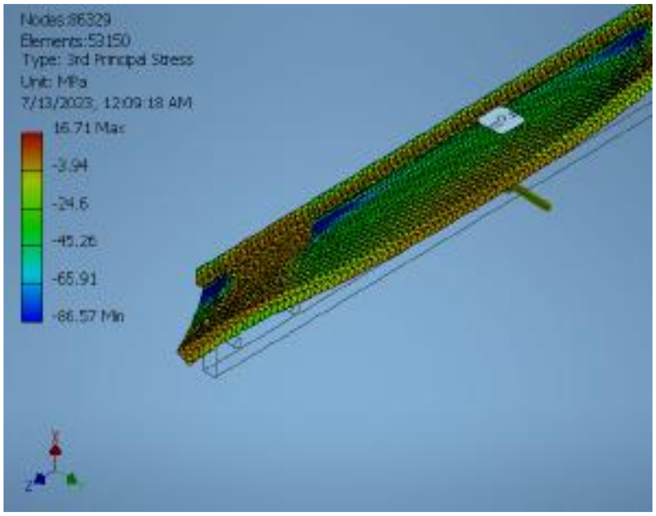

Fig. 4.2.9(f) 3rd Principle Stress maximum of Block

The minimum displacement for the Block Mounting Bracket is simulated using Autodesk Inventor and is depicted in Fig. 4.2.9(g), while the maximum Displacement is represented in Fig. 4.2.9(h)

Displacement:

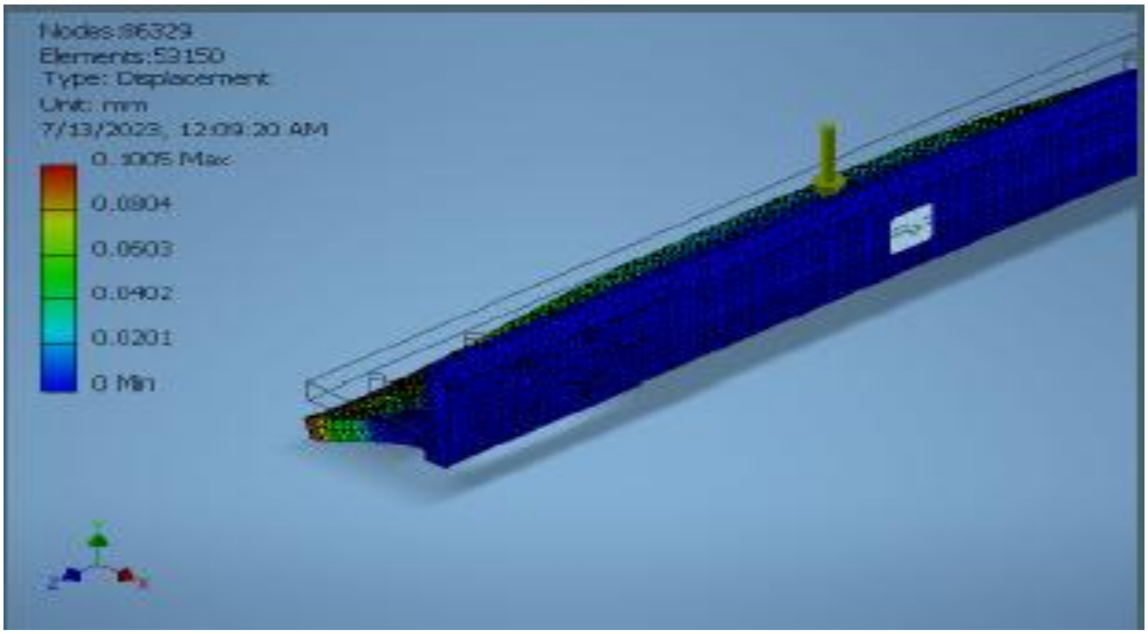

Fig. 4.2.9(g) displacement minimum of Block Mounting Bracket

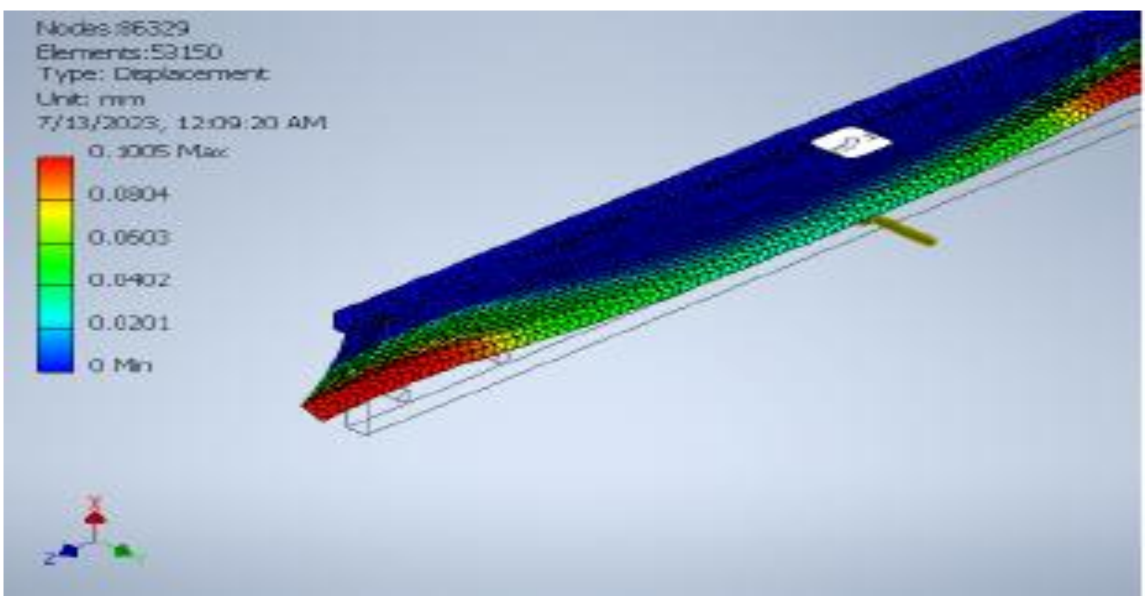

Fig. 4.2.9(h) displacement maximum of Block Mounting Bracket

The minimum Safety Factor for the Block Mounting Bracket is simulated using Autodesk Inventor and is depicted in Fig. 4.2.9(i), while the maximum Safety Factor is represented in Fig. 4.2.9(j)

Safety Factor

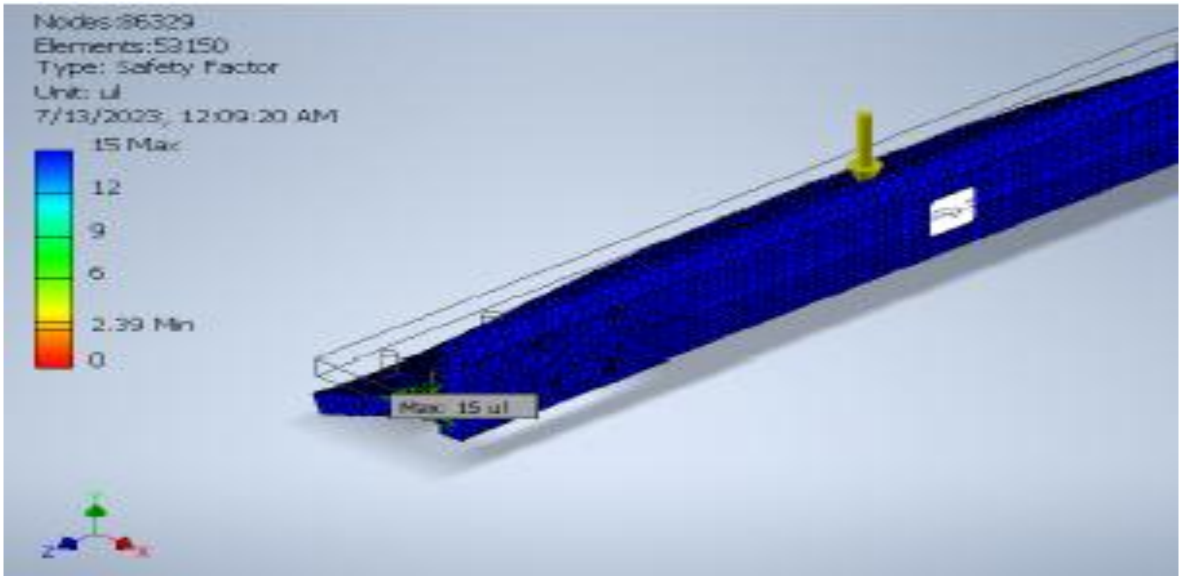

Fig. 4.2.9(i) safety factor minimum of Block Mounting Bracket

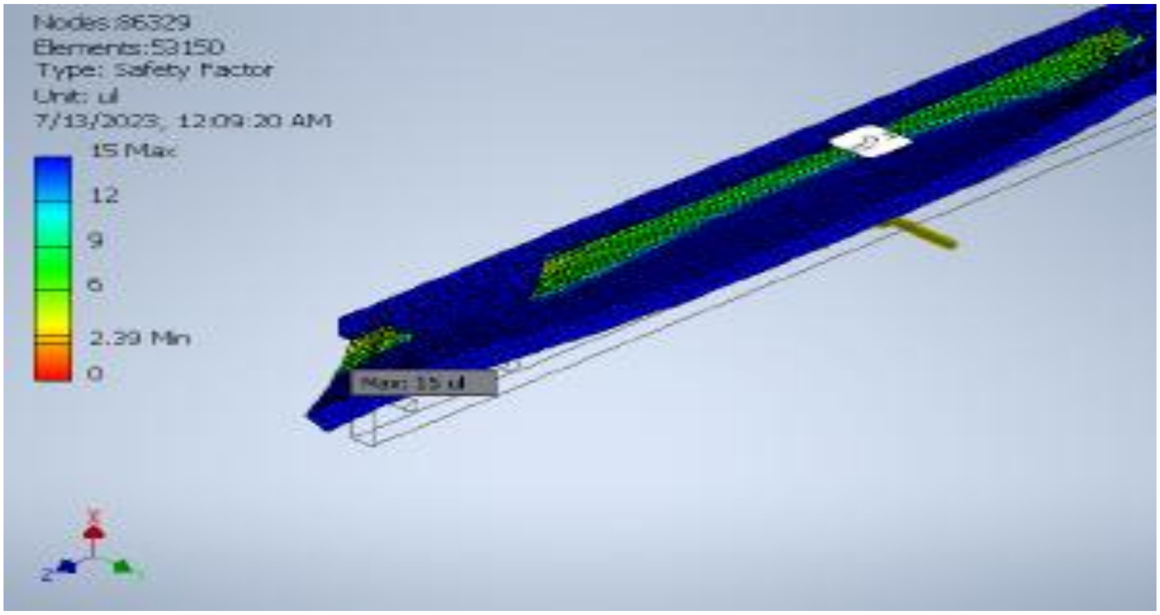

Fig. 4.2.9(j) safety factor maximum of Block Mounting Bracket

4.2.10 **<u>Part Number</u>**:M1071-01-12, Gearbox Mounting Bracket

<u>Material</u> : Mild Steel, Mass Density- 7.85g/cm^3, Yield Strength- 207 MPa ,Ultimate Tensile Strength-345 MPa, Young's Modulus-220 GPa, Poisson's Ratio- 0.275 ul, Shear Modulus- 86.2745 GPa.The minimum von Mises stress for the Gearbox Mounting Bracket is simulated using Autodesk Inventor and is depicted in Fig. 4.2.10(a), while the maximum von Mises stress is represented in Fig. 4.2.10(b).

<u>Von Mises Stress:</u>

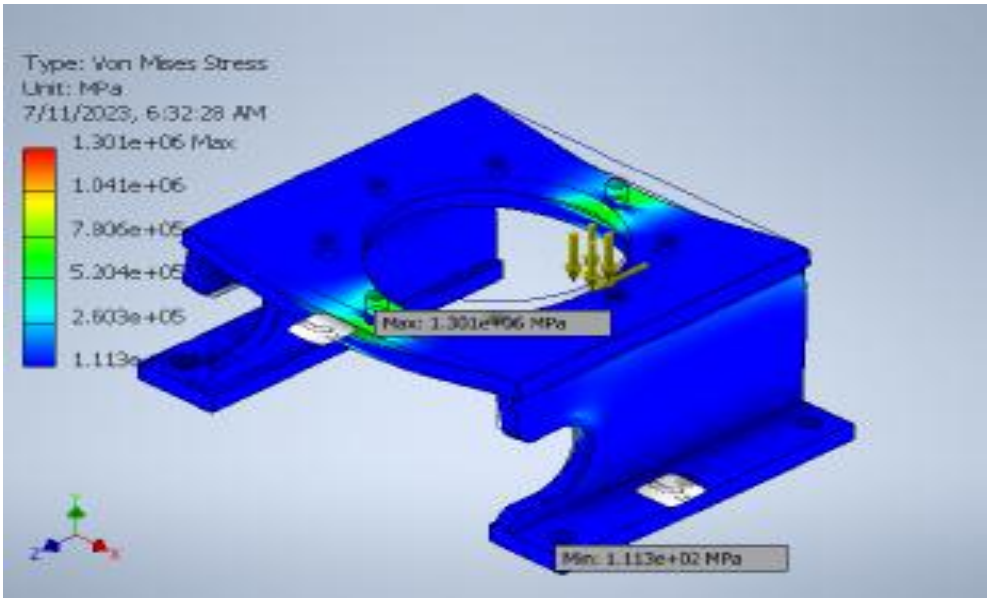

Fig. 4.2.10(a) Von Mises Stress minimum of Gearbox Mounting Bracket

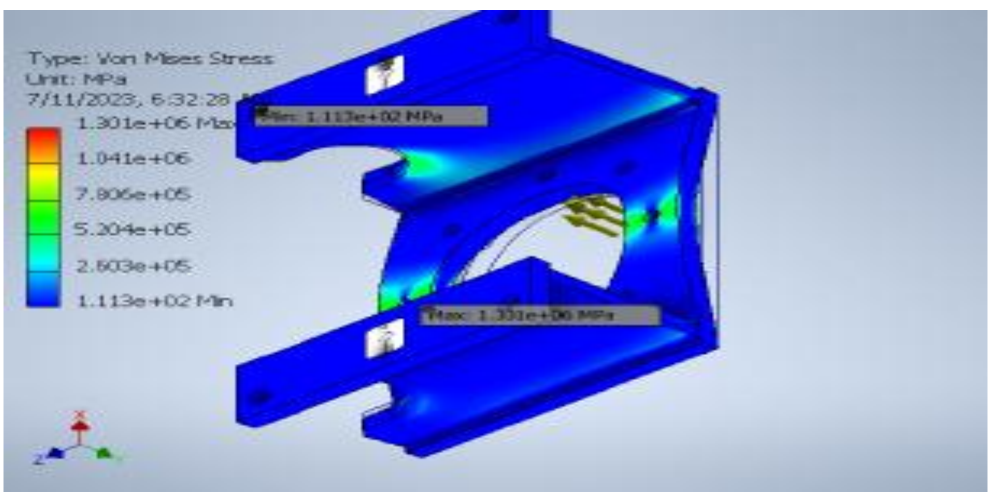

Fig. 4.2.10(b) Von Mises Stress maximum of Gearbox Mounting Bracket

The minimum 1St Principle Stress for the Gearbox Mounting Bracket is simulated using Autodesk Inventor and is depicted in Fig. 4.2.10(c), while the maximum 1St Principle Stress is represented in Fig. 4.2.10(d). and the minimum 3rd Principle Stress for the Gearbox Mounting Bracket is simulated using Autodesk Inventor and is depicted in Fig. 4.2.10(e), while the maximum 3rdPrinciple Stress is represented in Fig. 4.2.10(f).

<u>1St Principle Stress:</u>

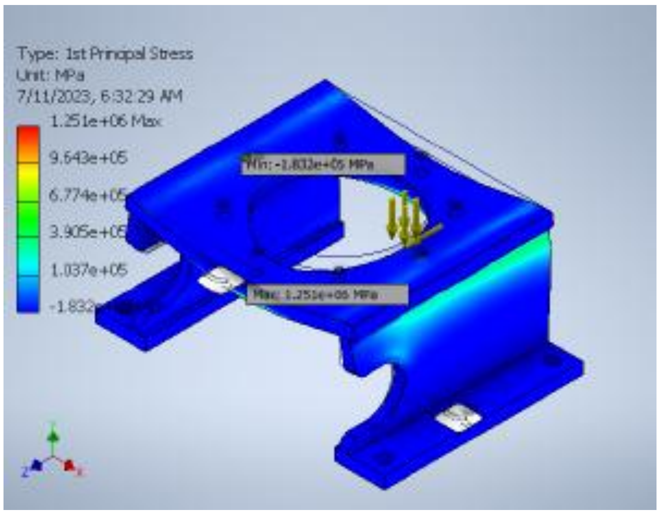

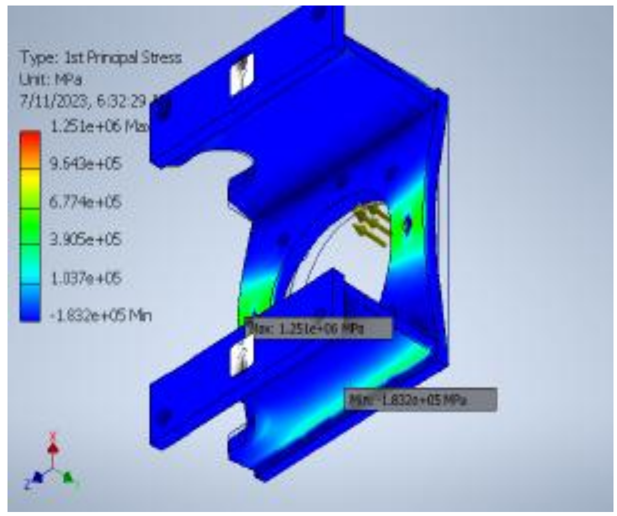

Fig. 4.2.10(c) 1St Principle Stress minimum of Gearbox

Fig. 4.2.10(d) 1St Principle Stress maximum of Gearbox

<u>3rd Principle Stress:</u>

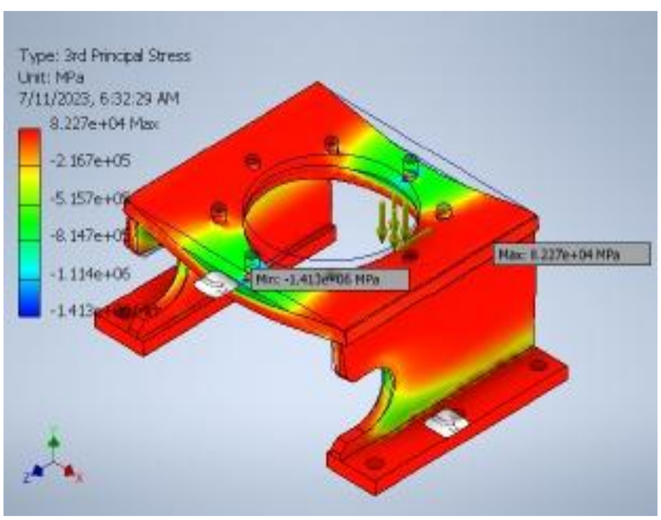

The

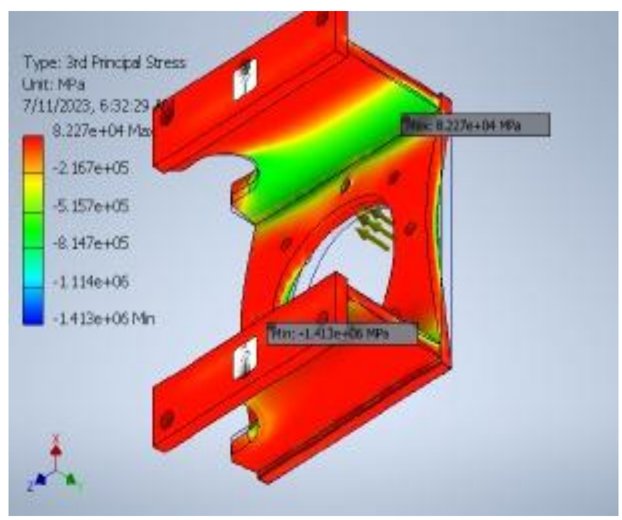

Fig. 4.2.10(e) 3rd Principle Stress minimum of Gearbox

Fig. 4.2.10(f) 3rd Principle Stress maximum of Gearbox

minimum displacementfor the Gearbox Mounting Bracket is simulated using Autodesk Inventor and is depicted in Fig. 4.2.10(g), while the maximum Displacementis represented in Fig. 4.2.10(h)

<u>Displacement:</u>

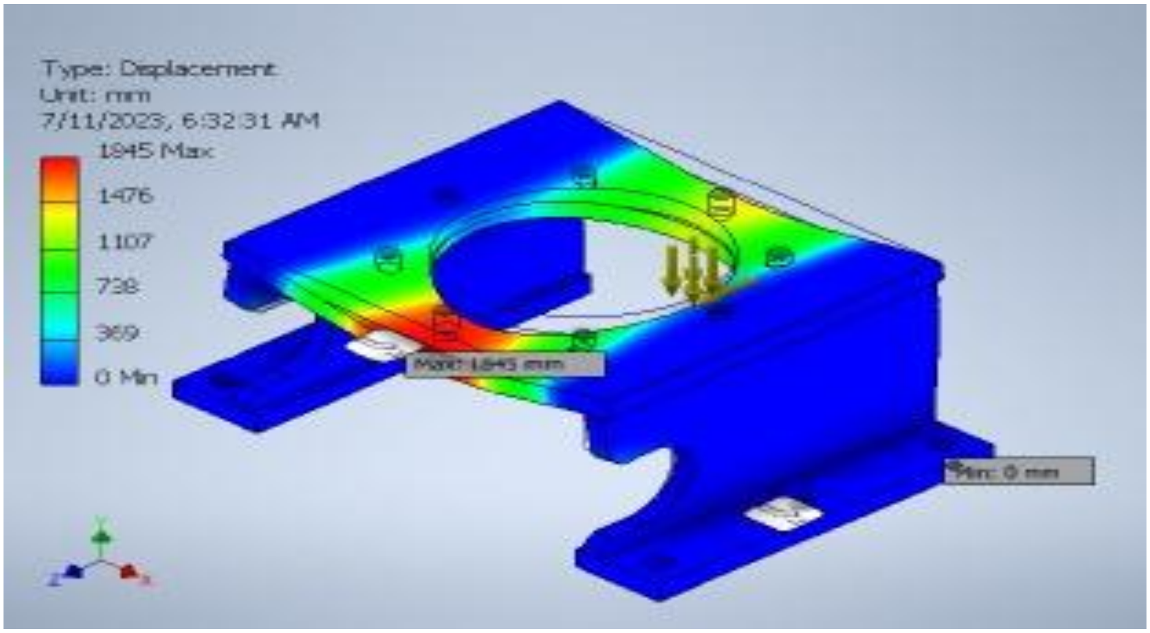

Fig. 4.2.10(g) displacement minimum of Gearbox Mounting Bracket

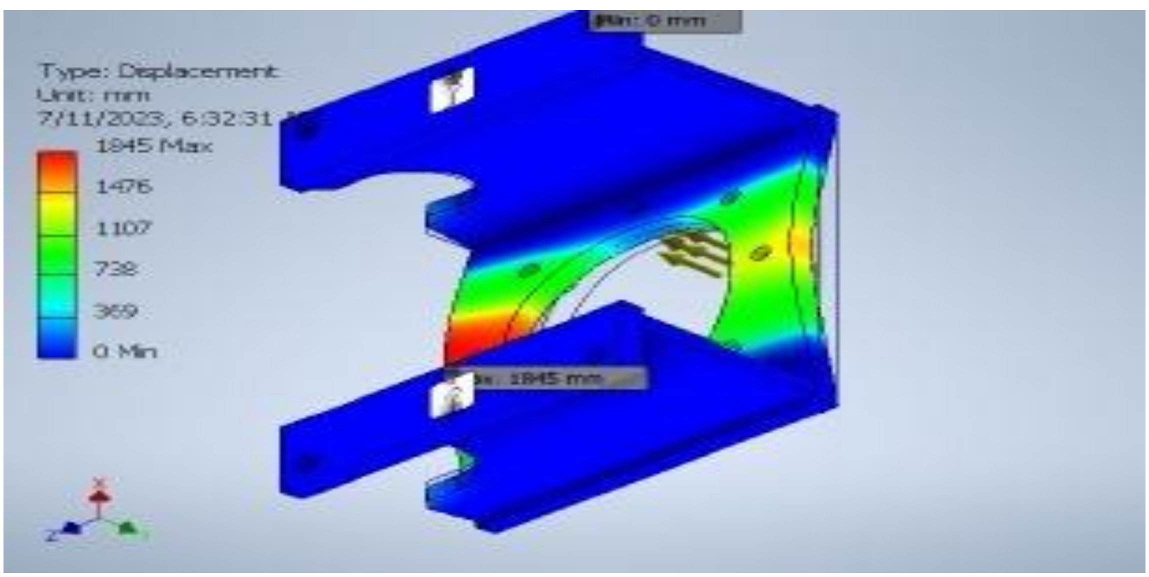

Fig. 4.2.10(h) displacement maximum of Gearbox Mounting Bracket

4.3 Graph plot with analyze value

Based on the structural analysis conducted above, we have generated a graph to consolidate the findings. This graph serves to clarify which components need strengthening for a better understanding of the overall assessment.

4.3.1 **Von Mises Stress**

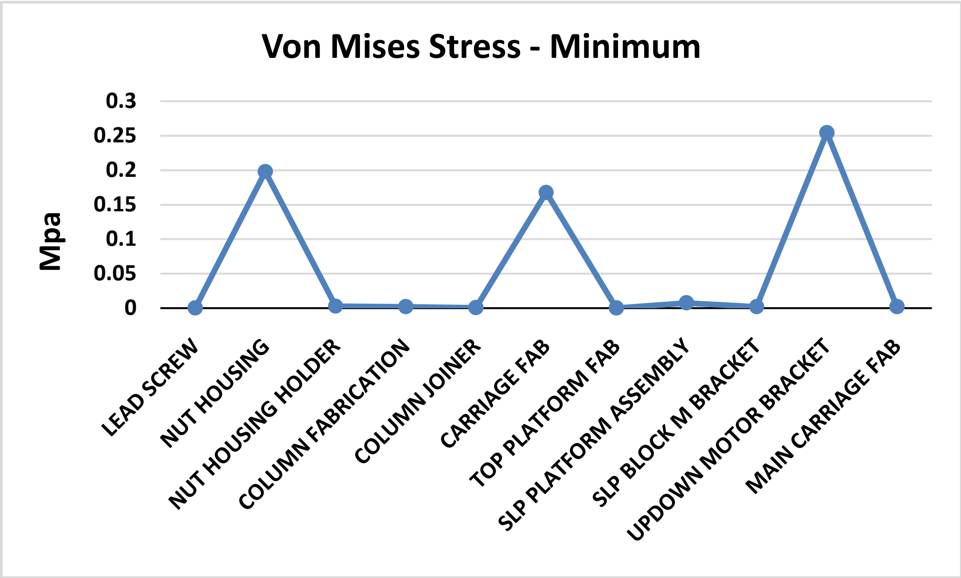

Fig. 4.3.1(a) Plotting of Minimum Von Mises Stress vs. all components

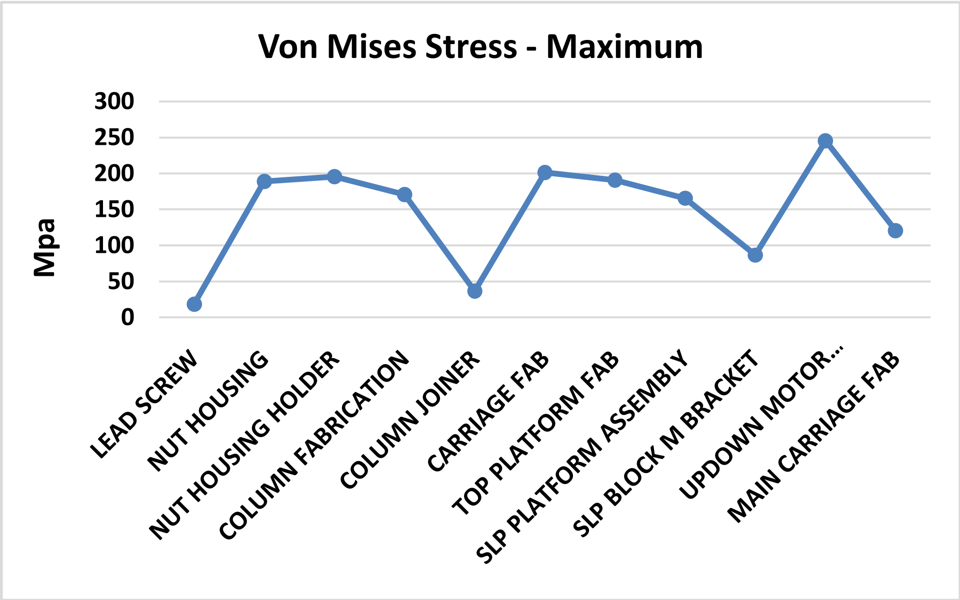

Fig. 4.3.1(b) Plotting of Maximum Von Mises Stress vs. all component

4.3.2 **1St Principle Stress:**

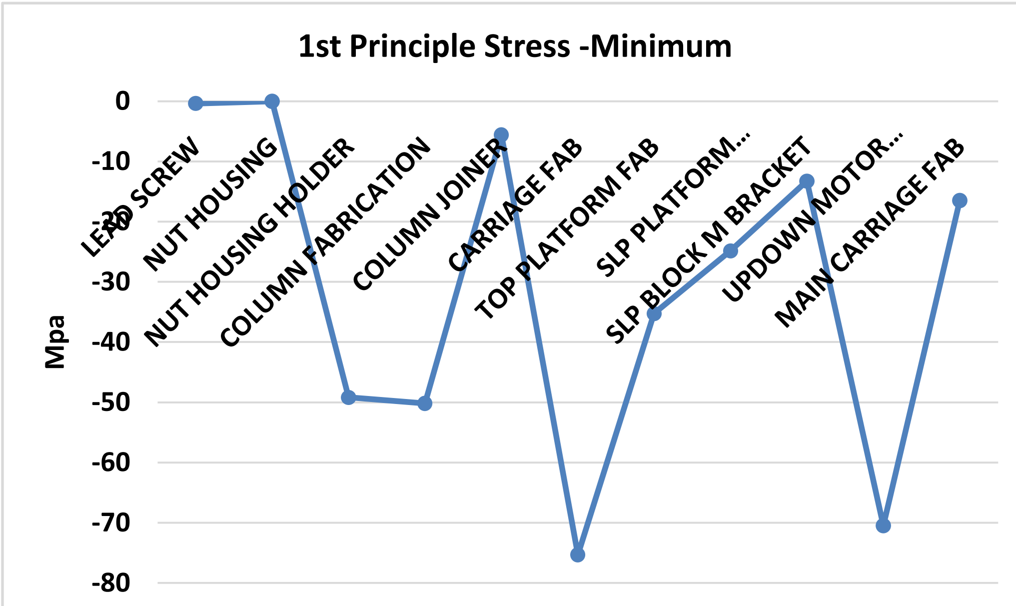

Fig. 4.3.2(a)Plotting of Minimum Von Mises Stress vs all component

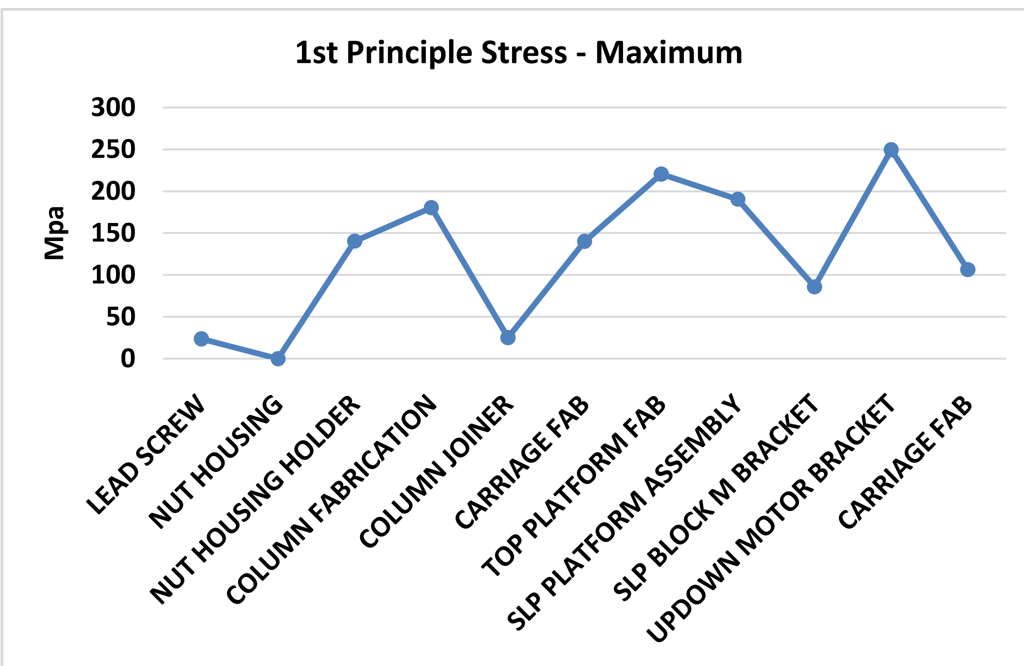

Fig. 4.3.2 (b)Plotting of Maximum Von Mises Stress vs all component

4.3.3 3rd Principle Stress:

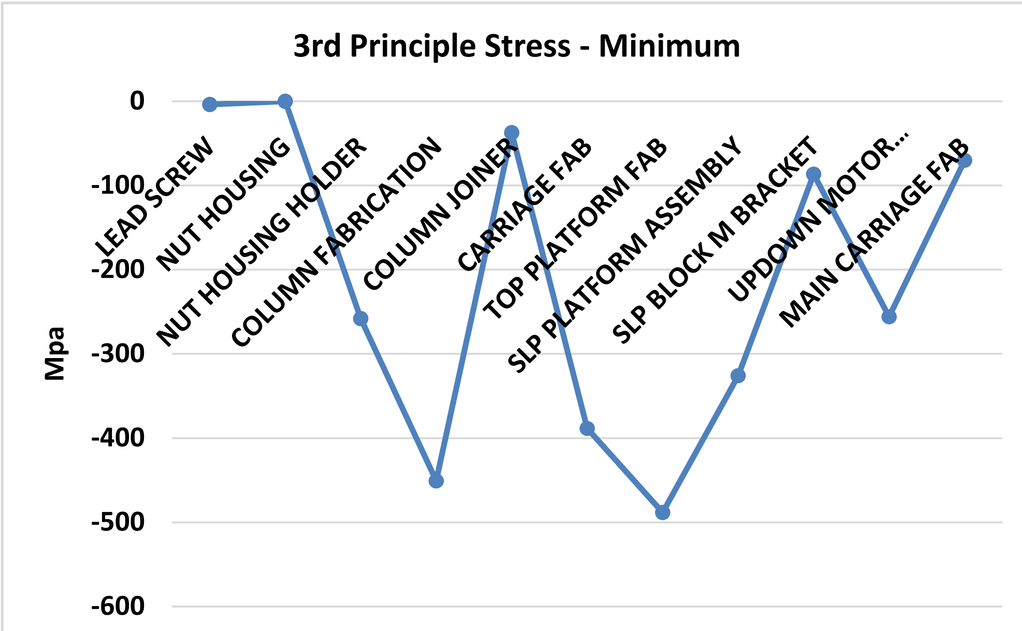

*Fig.*4.3.3 (a)**Plotting of Minimum Principle Stress vs all component**

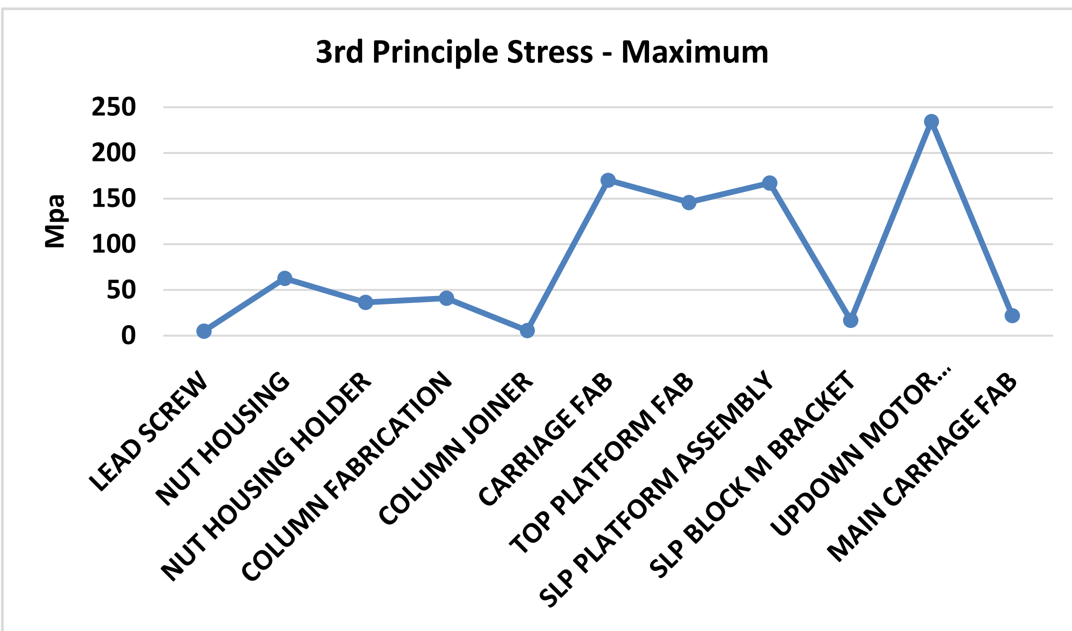

Fig. 4.3.3 (b) Plotting of Maximum Principle Stress vs all component

4.3.4 Displacement

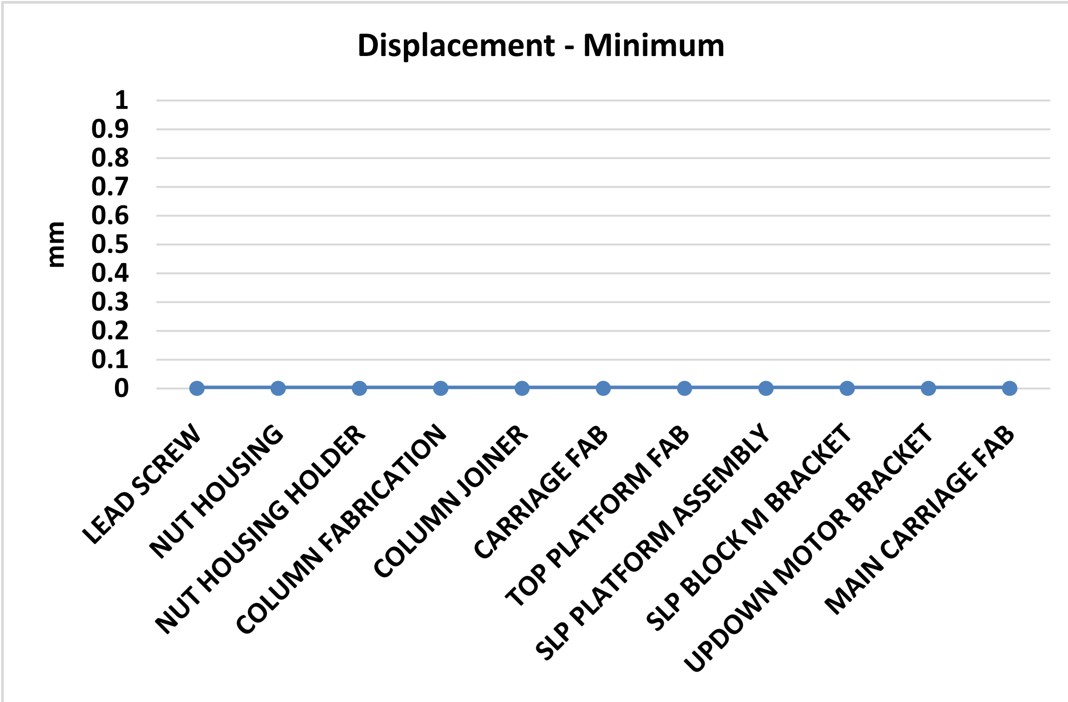

Fig. 4.3.4 (a) Plotting of Minimum Displacement vs all component

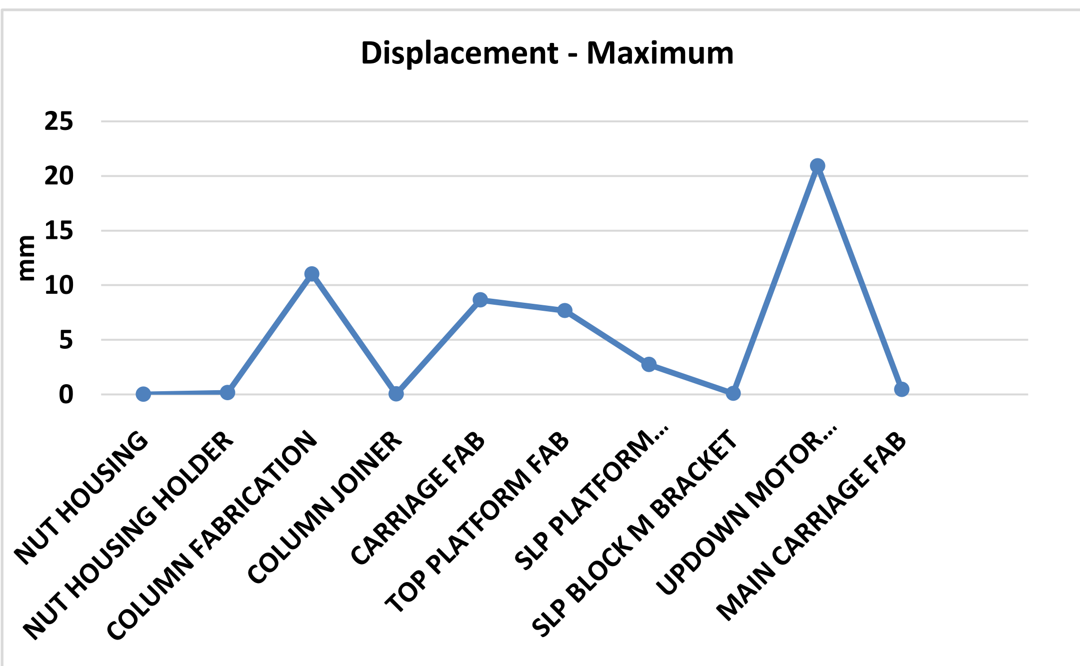

Fig. 4.3.4 (b) Plotting of Maximum Displacement vs all components

4.3.5 Factor of safety

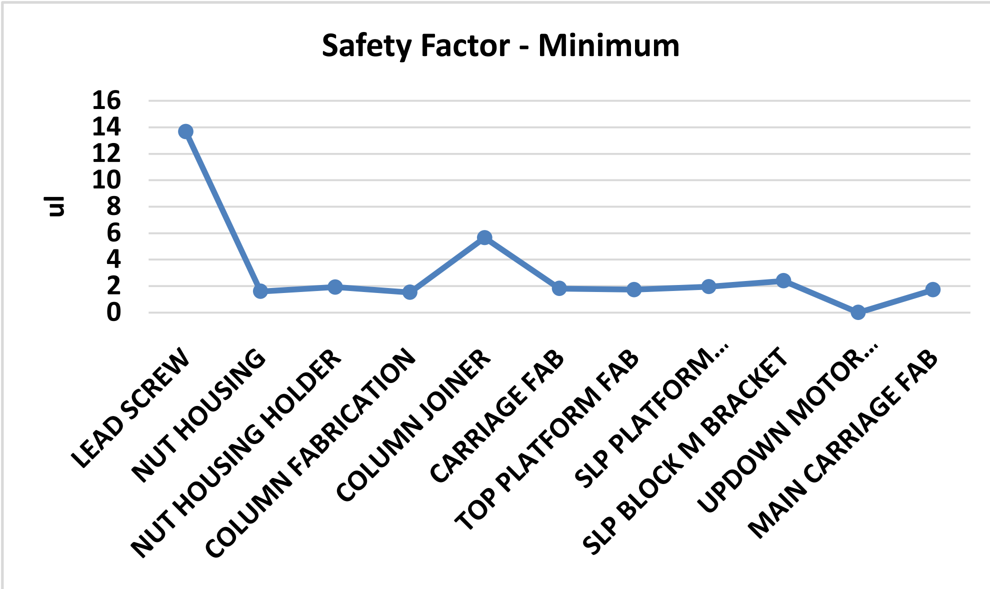

Fig. 4.3.5 (a) Plotting of Minimum Safety Factor vs all component

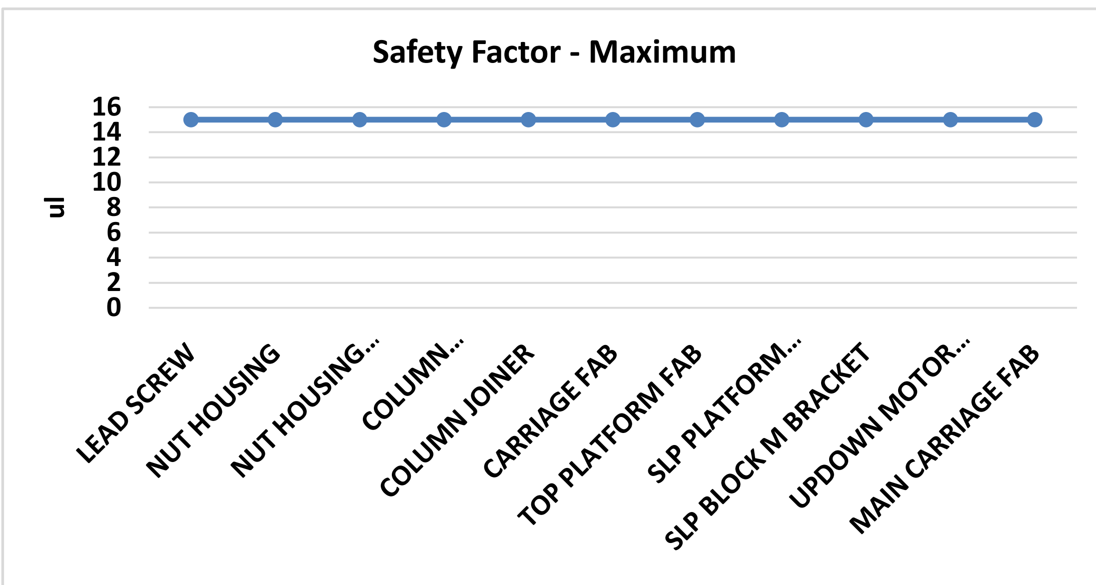

Fig. 4.3.5 (b) Plotting of Maximum Safety Factor vs all component

Analysing the above graph plotting data from Von Mises Stress Fig. 4.3.1 (a &b), 1st Principal Stress Fig. 4.3.2 (a &b), 3rd Principal Stress Fig. 4.3.3 (a &b), Displacement Fig. 4.3.4 (a &b) and Safety factor Fig. 4.3.5 (a &b) the study of stress-displacement analysis of the major components of the platform, we have summarized our findings with graph plotting. From our analysis, it is evident that most of the platform's components are within the safe stress and displacement limits, with one notable exception being the up-down motor bracket.

Upon closer examination, we have identified a micro-stress concentration zone in a few components. This concentration of stress is primarily attributed to the absence of fillets or chamfers in the modeling, which can lead to localized stress accumulation.

To address this issue in the motor bracket, we have implemented an additional ribbing design. This modification is intended to distribute stress more evenly across the bracket and prevent any potential failure points.

Overall, our comprehensive analysis indicates that the platform is structurally sound and safe in terms of stress and displacement concerns.

Practically how we give support of motor bracket.

Fig. 4.3.6 additional ribbing on motor bracket

Chapter 5

5 Conclusions and Scope of Future Work

During my literature review, I observed that there is limited prior research on this specific topic. In all the cases I came across, the nut was affixed to the carriage. However, in our project, we have implemented a floating nut mechanism and have also introduced a safety nut to enhance protection in the event of the primary nut's failure.

5.1 Conclusion:

In this thesis, we have harnessed data sourced from a purchase order by Hitachi India Limited through Vikrant Special Machines Private Limited. This data included technical specifications, which we effectively employed to design and analyze a leadscrew-driven platform featuring a unique floating nut and safety nut mechanism. This innovative design presents numerous benefits, such as heightened safety measures, decreased wear and tear, and improved efficiency within linear motion systems. Our research has made a meaningful contribution to the field of mechanical engineering by delivering a comprehensive design methodology.

Key findings and contributions of this research can be summarized as follows:

Floating Nut Mechanism: We have demonstrated the feasibility and benefits of the floating nut mechanism in leadscrew-driven platforms. This mechanism allows for smoother motion with auto aligned with nut axis to leadscrew axis.

Safety Nut Mechanism: The safety nut mechanism provides an additional layer of safety in the event of unexpected damage to the main nut. This particular safety nut is designed as a split type nut, making assembly and maintenance straightforward and user-friendly.

Performance Analysis: The machine, installed at Hitachi India Limited's Vadodara, Maharashtra plant, has proven to deliver a reliable and smooth operational experience, adding an additional layer of safety.

5.2 Scope of Future Work:

While this thesis has made significant strides in the design and analysis of leadscrew-operated platforms with floating and safety nuts, there remain several avenues for future research and development:

Optimization: Further research can focus on optimizing the design both nut floating mechanism and safety nut.

Alignment axis increase: In our design of nut floating, we have incorporated one rotational axis and one translational axis. Future research could explore the possibility of making both of the axes rotational to make the nut more flexible.

Safety Mechanism Enhancement: Enhancing the safety nut mechanism to provide even more robust protection against overloads and leadscrew failures is an important area for future work.

In conclusion, this thesis has laid the foundation for the design of leadscrew-operated platforms with floating and safety nuts. The future work in this field holds the potential to further improve these systems, expanding their practical applications and contributing to advancements in various industries.

References

[1] Deepak Rote, KaustubhKolhe, Vinitmangaonkar,Vinayshinde and Mr. Syed Zulfequar Ali.“Optimisation in Design of Mechanical Scissor Lift”. International Engineering Research Journal (IERJ) Special Issue 3 Page 35-39, 2016.

[2] F. Qin-man, W. Yong-hai and X. Cheng, "Dynamic Simulation on Mechanic-Liquid Coupling Model of Lift Mechanism," 2009 Second International Conference on Information and Computing Science, Manchester, UK, 2009, pp. 160-163, doi: 10.1109/ICIC.2009.351.

[3] Hanchao Li; Daisuke Harada; NaohikoHanajima; HidekazuKajiwara; KentaroKurashige; Yoshinori Fujihira; Masato Mizukami. "Application and performance evaluation of a lifting device with alternating rotation hoist," 2016 IEEE/SICE International Symposium on System Integration (SII), Sapporo, Japan, 2016, pp. 385-390, doi: 10.1109/SII.2016.7844029.

[4] Wang N, Cao G, Wang L, Lu Y, Zhu Z. Modelling and control of flexible guided lifting system with output constraints and unknown input hysteresis. Journal of Vibration and Control. 2020;26(1-2):112-128. doi:10.1177/1077546319877704.

[5] M. Atif, F. Mumtaz and M. Adeel, "Design and fabrication of a motorized screw jack," 6th Smart Cities Symposium (SCS 2022), Hybrid Conference, Bahrain, 2022, pp. 114-119, doi: 10.1049/icp.2023.0358.

[6] K.P. Mackie, “The 1893 Blackwood Screw Jack Ship lift, Barbados The Oldest Ship lift in the World”.PIANC MMX Congress Liverpool UK 2010.

[7] IgnatioMadanhire, TapiwaChatindo and Charles Mbohwa “Development of a Portable Motorized Car Jack”, Proceedings of the International Conference on Industrial Engineering and Operations Management Pilsen, Czech Republic, July 23-26, 2019

[8] R. Dong, C. Pan, J. Hartsell, D. Welcome, T. Lutz, A. Brumfield, J. Harris, J. Wu, B. Wimer, V. Mucino and K. Means, "An Investigation on the Dynamic Stability of Scissor Lift," Open Journal of Safety Science and Technology, Vol. 2 No. 1, 2012, pp. 8-15. doi: 10.4236/ojsst.2012.21002

[9] Zhang, Wei & Zhang, Chen & Zhao, Jiangbo& Du, Chunzhi. (2015). A Study on the Static Stability of Scissor Lift. The Open Mechanical Engineering Journal. 9. 954-960. 10.2174/1874155X0150901954.

[10]Okwu, Modestus. (2017). Modified Screw Jack for Lifting Operation in Industrial Setting. International Journal of Engineering and Technologies. 13. 10.18052/www.scipress.com/IJET.13.39.

[11] Rout, Ivan Sunit. (2014). Design and Fabrication of motorized automated Object lifting jack. IOSR Journal of Engineering. 4. 06-12. 10.9790/3021-04550612.

[12] Fang, Guisheng& Cheng, Jinfeng. (2022). Design and Implementation of a Wire Rope Climbing Robot for Sluices. Machines. 10. 1000. 10.3390/machines10111000.

[13] ShivamAgrawal ,SiddharthPatil and SnehaShirke . “Lead Screw Mechanical Lifting Mechanism”.International Journal of Research Publication and Reviews, Vol 3, no 6, pp 4179-4182, June 2022.

[14] A Textbook of Machine Design by R.S.KhurmiAndJ.K.Gupta