Subject Code - Ex/ME/5/T/114/2025

BACHELOR OF ENGINEERING (MECHANICAL ENGINEERING)
FIRST YEAR FIRST SEMESTER – 2025
MACHINE DRAWING – I

Total Time 4 hrs **Full Marks: 100**

Missing data if any are to be reasonably assumed. All dimensions are in mm.

Q1. Draw the detailed drawing of the of the stuffing box [60]

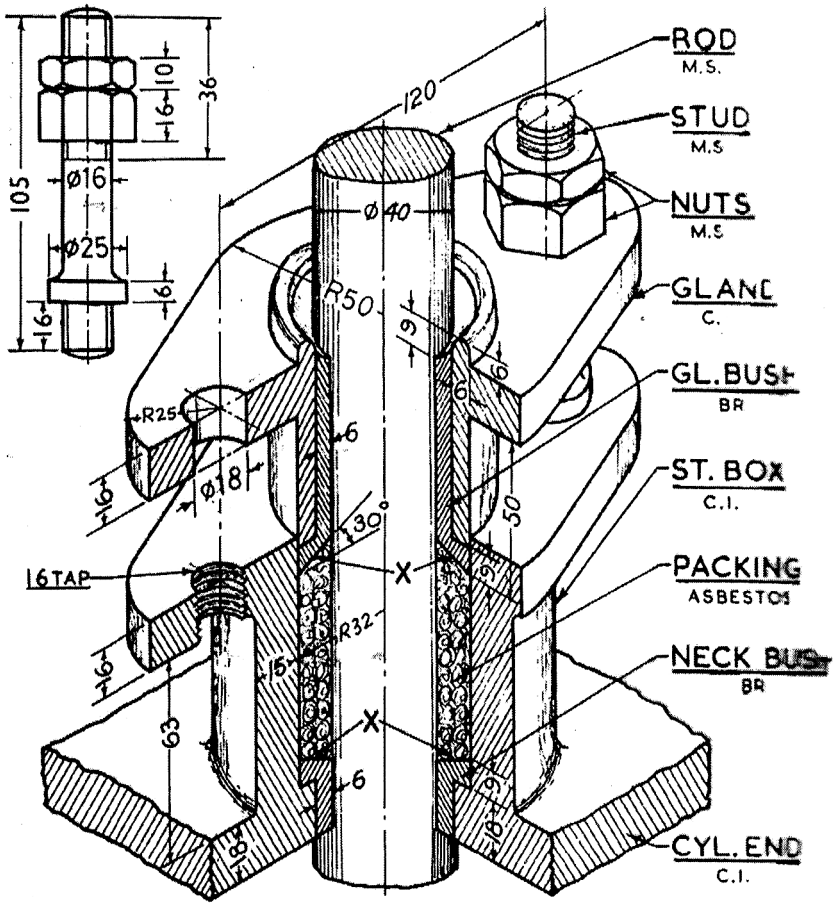
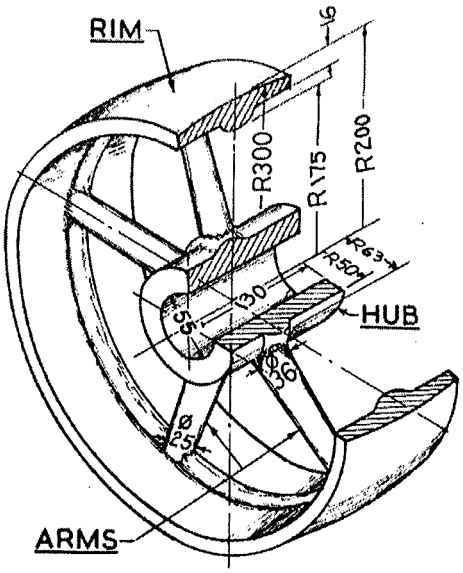
Q2. Draw the two views of the pulley given below with suitable shaft and key [40]